Data sheet

1579.5 RKD 2,5/35/SV BU

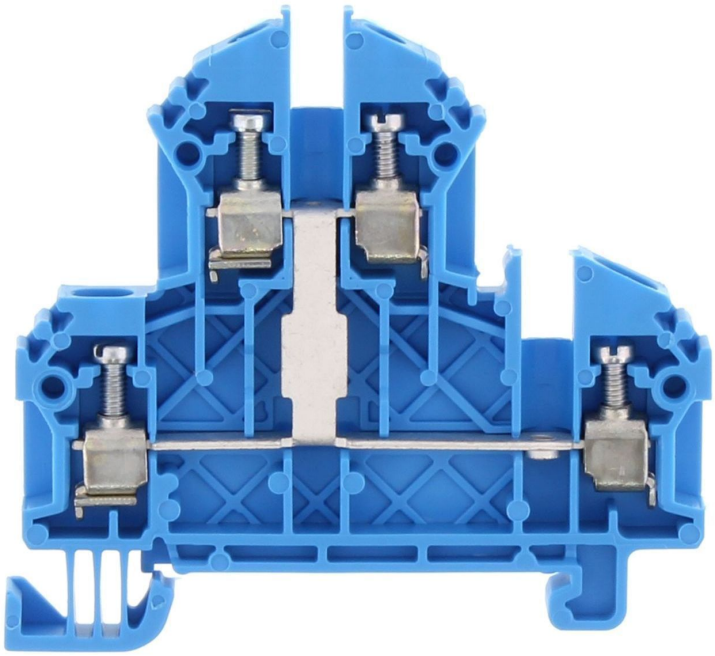

Double-level terminal, Screw connection, Mounting type: Mounting rail TS 35/7.5, Rated cross-section: 2.5 mm², Width: 5 mm, Colour: Blue

RAL: Ähnlich 5005

Business data

Article number	1579.5
Article name	RKD 2,5/35/SV BU
GTIN (EAN)	4044211047672
Packaging unit	100
Quantity unit	PC
Weight per piece (not including packaging)	10.4 g
Weight per piece (including packaging)	11.3 g
Unit of weight	G
Customs number	85369010
Country of origin	CZ
Prio-Article	1579.2
Product description	Double-level terminal

Data sheet

1579.5 RKD 2,5/35/SV BU

Technical data

Dimensions

Length	60.2 mm
Width	5 mm
Height TS 35/7.5	56 mm

Ratings

Rated voltage	500 V
Rated current	24 A
Rated cross-section	2.5 mm²
Rated impulse voltage	6 kV
Overvoltage category	III
Contamination degree	3
Maximum power dissipation for nominal condition	1.54 W

Connection data

Connection principle	Screw connection
Connection position	Lateral
Connections	4
Number of terminals per level	2
Number of levels	2
Levels internally bridged	✓
Wire cross-section single-core (rigid) / stranded, min.	0.2 mm²
Wire cross-section single core (rigid)/stranded, max.	4 mm²
Wire cross-section stranded, min.	0.2 mm²
Wire cross-section stranded, max.	4 mm²
Wire cross-section stranded with wire-end ferrules, min.	0.2 mm²
Wire cross-section stranded with wire-end ferrules, max.	2.5 mm²
Wire cross-section AWG, min.	22
Wire cross-section AWG, max.	14
Stripping length	7 mm
Screw head	Slotted
Screw threading	M 2,5
Tightening torque, min.	0.4 Nm
Tightening torque, max.	0.8 Nm

Data sheet

1579.5 RKD 2,5/35/SV BU

Technical data

Materials

Insulation housing	Polyamide 6.6
Flammability class UL 94	V-2
Working temperature, min.	-40 °C
Working temperature, max.	105 °C

Further technical data

Mounting type	Mounting rail TS 35/7,5
Gauge plug acc. to EN 60 947-1	A3
Number of cross-connection channels	1
End plate required	✓
Number of test pick-off options	1

Environmental Product Compliance

REACH Conform	yes
REACH Reference date	2022-06-10
REACH Candidate Substance Note	No
RoHS Conform	yes

Approvals

Standards and regulations	
EAC approval	TR ZU 004/2011
EAC approval granted	yes

CSA approval	
CSA approval	C22.2 No 158
CSA approval granted	yes
CSA Usegroup C: rated voltage	300 V
CSA Usegroup C: rated current	20 A
CSA wire cross-section AWG, min.	22
CSA wire cross-section AWG, max.	14
CSA stripping length	7 mm

CSAus approval	
CSAus approval	UL 1059
CSAus approval granted	yes
CSAus Usegroup C: rated voltage	300 V
CSAus Usegroup C: rated current	20 A
CSAus wire cross-section AWG, min.	22
CSAus wire cross-section AWG, max.	14
CSAus stripping length	7 mm

KEMA KEUR approval	
KEMA KEUR approval	EN 60947-7-1:2009
KEMA KEUR approval granted	yes
KEMA rated voltage	500 V
KEMA rated current	24 A
KEMA rated impulse voltage	6 kV
KEMA wire cross-section single core (rigid), min.	0.2 mm²
KEMA wire cross-section single-core (rigid), max.	4 mm²
KEMA wire cross-section stranded, min.	0.2 mm²
KEMA wire cross-section stranded, max.	4 mm²

Media

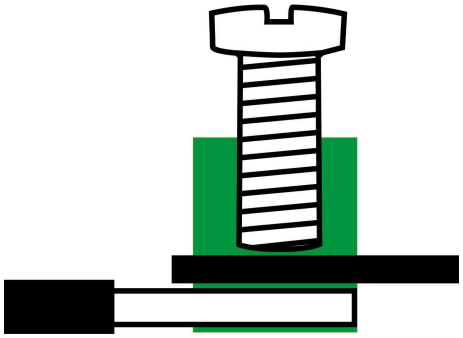

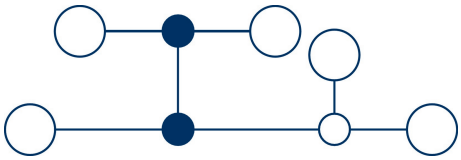

Accessories

End plate

End plate, Width: 1.5 mm, Colour: Beige

Article number	Article name	GTIN (EAN)	Packaging unit
2101.2	AP 4 BG	4044211151652	20

Insulation plate

Insulation plate, Colour: Beige

Article number	Article name	GTIN (EAN)	Packaging unit
2566.2	TRS 3 BG	4044211053567	100 ST

Cross-connector

Cross-connector, No. of poles: 4, Mounting type: Can be screwed on, Width: 19.3 mm, Rated cross-section: 2.5 mm², Colour: natural

Article number	Article name	GTIN (EAN)	Packaging unit
2569.0	Q 4	4044211053598	20 ST

Cross-connector, No. of poles: 10, Mounting type: Can be screwed on, Width: 49.9 mm, Rated cross-section: 2.5 mm², Colour: natural

Article number	Article name	GTIN (EAN)	Packaging unit
2570.0	Q 10	4044211053604	10 ST

Cross-connector, No. of poles: 3, Mounting type: Can be screwed on, Width: 14.2 mm, Rated cross-section: 2.5 mm², Colour: natural

Article number	Article name	GTIN (EAN)	Packaging unit
2568.0	Q 3	4044211053581	50 ST

Data sheet

1579.5 RKD 2,5/35/SV BU

Cross-connector

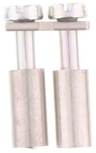

Cross-connector, No. of poles: 2, Mounting type: Can be screwed on, Width: 9.1 mm, Rated cross-section: 2.5 mm², Colour: natural

Article number	Article name	GTIN (EAN)	Packaging unit
2567.0	Q 2	4044211053574	50 ST

End stop

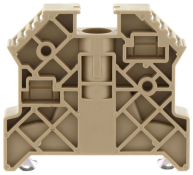

End stop, Mounting type: Mounting rail TS 35/7.5, Width: 9.5 mm, Colour: Beige

Article number	Article name	GTIN (EAN)	Packaging unit
2828.0	ES 35/K/ST BG	4044211055547	50

Test adapters

Test adapter, Length: 37.3 mm, Pitch size: 5 mm, Colour: Beige

Article number	Article name	GTIN (EAN)	Packaging unit
2821.0	TAD 5/1/S	4044211055479	10 ST

Screwdriver

Screwdriver with bare blade, Colour: Black-grey

Article number	Article name	GTIN (EAN)	Packaging unit
1085.0	SDB 0,5x3,0	4044211014643	1 ST

Quick marking

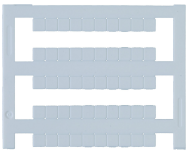

Terminal marker / Pocket Maxicard, Length: 5 mm, Width: 5 mm, Colour: White

Article number	Article name	GTIN (EAN)	Packaging unit
4600.7	PMC SB 5/50 WH	4044211088903	500 ST

Data sheet

1579.5 RKD 2,5/35/SV BU

##INVERSE##CONTA-CONNECT

Test adapter, Length: 37.3 mm, Pitch size: 5 mm, Colour: Beige

Article number	Article name	GTIN (EAN)	Packaging unit
2821.0	TAD 5/1/S	4044211055479	10 ST