Data sheet

2269.2 IKD 2,5/F/Q BG

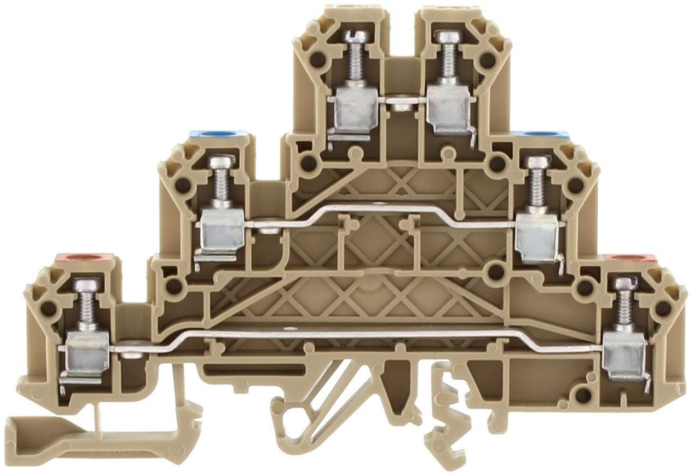

Three-level initiator terminal | Multi-wire terminal, Screw connection, Mounting type:Mounting rail TS 35/7.5 and TS 32, Rated cross-section: 2.5 mm², Width: 5 mm, Colour: Beige

Business data

Article number	2269.2
Article name	IKD 2,5/F/Q BG
GTIN (EAN)	4044211050795
Packaging unit	50
Quantity unit	PC
Weight per piece (not including packaging)	15.4 g
Weight per piece (including packaging)	17.18 g
Unit of weight	G
Customs number	85369010
Country of origin	CZ
Product description	Three-level initiator terminal | Multi-wire terminal
Colour	Beige

Data sheet

2269.2 IKD 2,5/F/Q BG

Technical data

Dimensions	
Length	84.8 mm
Width	5 mm
Height TS 35/7.5	58.3 mm
Height TS 32	62.8 mm

Ratings	
Rated voltage	250 V
Rated current	24 A
Rated cross-section	2.5 mm²
Rated impulse voltage	4 kV
Overvoltage category	III
Contamination degree	3
Maximum power dissipation for nominal condition	2.3 W

Connection data	
Connection principle	Screw connection
Connection position	Lateral
Connections	6
Number of terminals per level	2
Number of levels	3
Wire cross-section single-core (rigid) / stranded, min.	0.2 mm²
Wire cross-section single core (rigid)/stranded, max.	4 mm²
Wire cross-section stranded, min.	0.2 mm²
Wire cross-section stranded, max.	4 mm²
Wire cross-section stranded with wire-end ferrules, min.	0.2 mm²
Wire cross-section stranded with wire-end ferrules, max.	2.5 mm²
Wire cross-section AWG, min.	22
Wire cross-section AWG, max.	14
Stripping length	7 mm
Screw head	Slotted
Screw threading	M 2,4
Tightening torque, min.	0.4 Nm
Tightening torque, max.	0.8 Nm

Data sheet

2269.2 IKD 2,5/F/Q BG

Technical data

Materials

Insulation housing	Polyamide 6.6
Flammability class UL 94	V-2
Working temperature, min.	-40 °C
Working temperature, max.	105 °C

Further technical data

Mounting type	Mounting rail TS 35/7.5 and TS 32
Gauge plug acc. to EN 60 947-1	A3
Number of cross-connection channels	3
End plate required	✓
Can be cross-connected	✓

Environmental Product Compliance

REACH Conform	yes
REACH Reference date	2022-06-10
REACH Candidate Substance Note	No
RoHS Conform	yes

Approvals

Standards and regulations	
EAC approval	TR ZU 004/2011
EAC approval granted	yes

CSA approval	
CSA approval	C22.2 No 158
CSA approval granted	yes
CSA Usegroup B: rated voltage	300 V
CSA Usegroup B: rated current	20 A
CSA wire cross-section AWG, min.	22
CSA wire cross-section AWG, max.	14
CSA stripping length	7 mm

CSAus approval	
CSAus approval	UL 1059
CSAus approval granted	yes
CSAus Usegroup B: rated voltage	300 V
CSAus Usegroup B: rated current	20 A
CSAus wire cross-section AWG, min.	22
CSAus wire cross-section AWG, max.	14
CSAus stripping length	7 mm

KEMA KEUR approval	
KEMA KEUR approval	EN 60947-7-1:2009
KEMA KEUR approval granted	yes
KEMA rated voltage	250 V
KEMA rated current	24 A
KEMA rated impulse voltage	4 kV
KEMA wire cross-section single core (rigid), min.	0.2 mm²
KEMA wire cross-section single-core (rigid), max.	4 mm²
KEMA wire cross-section stranded, min.	0.2 mm²
KEMA wire cross-section stranded, max.	4 mm²
KEMA torque, min.	0.4 Nm
KEMA torque, max.	0.8 Nm

Media

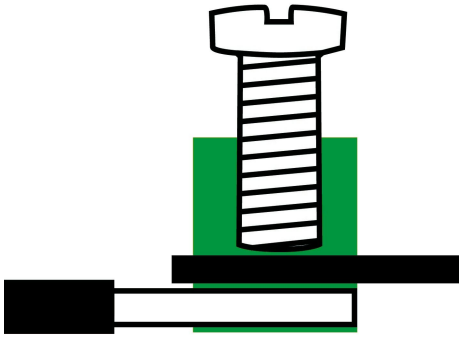

C US

M2.4

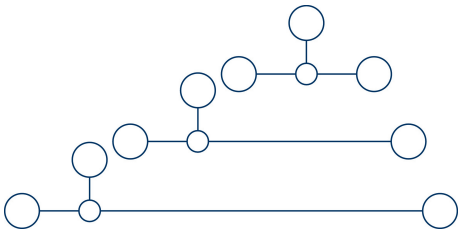

Accessories

End plate

End plate, Colour: Beige

Article number	Article name	GTIN (EAN)	Packaging unit
2699.2	AP 2,5/ID BG	4044211054397	20

Short end plate

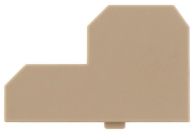

End plate, Colour: Beige

Article number	Article name	GTIN (EAN)	Packaging unit
2714.2	AP IKD 2,5/kurz BG	4044211054557	20 ST

Mounting screw

Mounting screw, M 2.5, Colour: natural

Article number	Article name	GTIN (EAN)	Packaging unit
2326.0	BS M 2,5x10	4044211051112	100 ST

Cross-connector

Cross-connector, No. of poles: 20, Mounting type: Can be screwed on, Width: 100.9 mm, Rated cross-section: 2.5 mm², Colour: natural

Article number	Article name	GTIN (EAN)	Packaging unit
2700.0	Q 20	4044211054410	10 ST

Cross-connector, No. of poles: 98, Mounting type: Screwable, Width: 500 mm, Rated cross-section: 2.5 mm², Colour: natural

Article number	Article name	GTIN (EAN)	Packaging unit
2151.0	Q 0,5 m/98 Pole	4044211049720	1 ST

Cross-connector

Cross-connector, No. of poles: 10, Mounting type: Can be screwed on, Width: 49.9 mm, Rated cross-section: 2.5 mm², Colour: natural

Article number	Article name	GTIN (EAN)	Packaging unit
2425.0	Q 10	4044211052072	10 ST

Cross-connector, No. of poles: 2, Mounting type: Can be screwed on, Width: 9.1 mm, Rated cross-section: 2.5 mm², Colour: natural

Article number	Article name	GTIN (EAN)	Packaging unit
2422.0	Q 2	4044211052041	50 ST

Cross-connector, No. of poles: 3, Mounting type: Can be screwed on, Width: 14.2 mm, Rated cross-section: 2.5 mm², Colour: natural

Article number	Article name	GTIN (EAN)	Packaging unit
2423.0	Q 3	4044211052058	50 ST

Cross-connector, No. of poles: 4, Mounting type: Can be screwed on, Width: 19.3 mm, Rated cross-section: 2.5 mm², Colour: natural

Article number	Article name	GTIN (EAN)	Packaging unit
2424.0	Q 4	4044211052065	20 ST

Cross-connection rail

Cross-connection rail, No. of poles: 10, Mounting type: Can be screwed on, Width: 49.9 mm, Rated cross-section: 2.5 mm², Colour: natural

Article number	Article name	GTIN (EAN)	Packaging unit
2420.0	QS 10	4044211052027	10 ST

Cross-connection rail, No. of poles: 98, Mounting type: Can be screwed on, Width: 500 mm, Rated cross-section: 2.5 mm², Colour: natural

Article number	Article name	GTIN (EAN)	Packaging unit
2519.0	QS 0,5 m	4044211053215	1 ST

Cross-connection rail

Cross-connection rail, No. of poles: 4, Mounting type: Can be screwed on, Width: 19.3 mm, Rated cross-section: 2.5 mm², Colour: natural

Article number	Article name	GTIN (EAN)	Packaging unit
2419.0	QS 4	4044211052010	50 ST

Cross-connection rail, No. of poles: 3, Mounting type: Can be screwed on, Width: 14.2 mm, Rated cross-section: 2.5 mm², Colour: natural

Article number	Article name	GTIN (EAN)	Packaging unit
2418.0	QS 3	4044211052003	100 ST

Cross-connection rail, No. of poles: 2, Mounting type: Can be screwed on, Width: 9.1 mm, Rated cross-section: 2.5 mm², Colour: natural

Article number	Article name	GTIN (EAN)	Packaging unit
2417.0	QS 2	4044211051990	100 ST

Quick marking

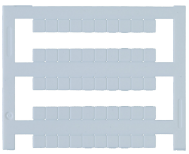

Terminal marker / Pocket Maxicard, Length: 5 mm, Width: 5 mm, Colour: White

Article number	Article name	GTIN (EAN)	Packaging unit
4600.7	PMC SB 5/50 WH	4044211088903	500 ST

Screwdriver

Screwdriver with bare blade, Colour: Black-grey

Article number	Article name	GTIN (EAN)	Packaging unit
1085.0	SDB 0,5x3,0	4044211014643	1 ST

Connecting sleeve

Data sheet

2269.2 IKD 2,5/F/Q BG

Connecting sleeve, Colour: natural

Article number	Article name	GTIN (EAN)	Packaging unit
2327.0	VH 5	4044211051129	100 ST