THIS DRAWING IS UNPUBLISHED. RELEASED FOR PUBLICATION 2007
© COPYRIGHT 2007 Tyco Electronics AMP GmbH ALL RIGHTS RESERVED.

LOC	DIST
AD	00

REVISIONS

P	LTR	DESCRIPTION	DATE	DWN	APVD
	C	REVISED PER ECO-13-002771	25FEB2013	KH	RP
	D	REVISED PER ECO-19-009248	08JUL2019	AP	SY

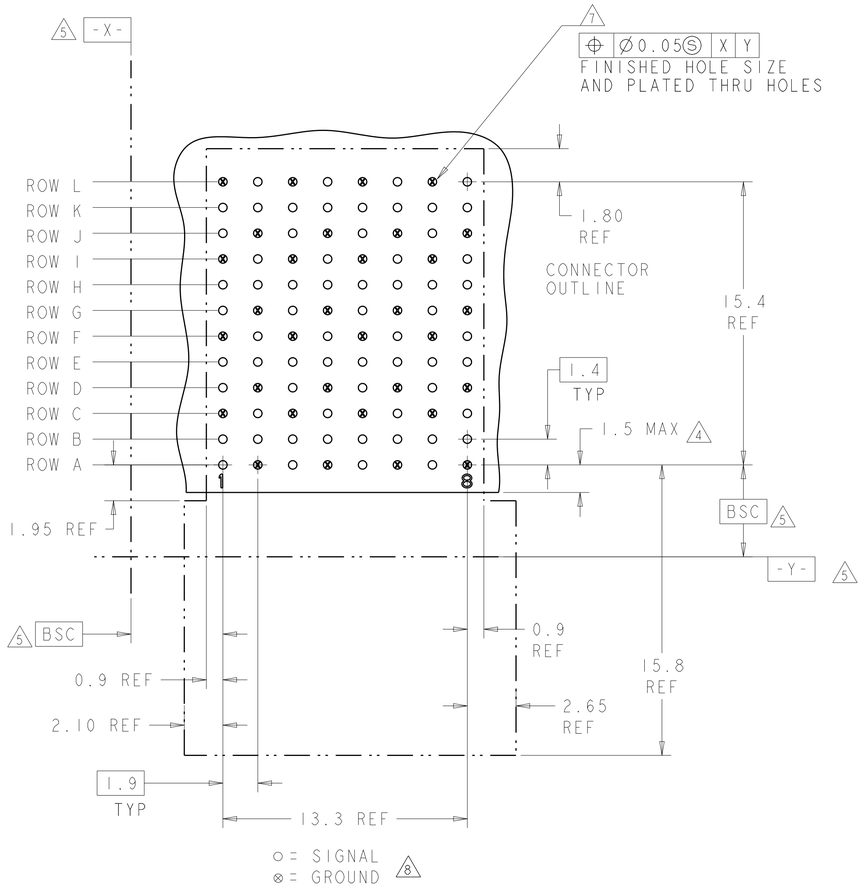

RECOMMENDED PC BOARD LAYOUT
COMPONENT SIDE SHOWN

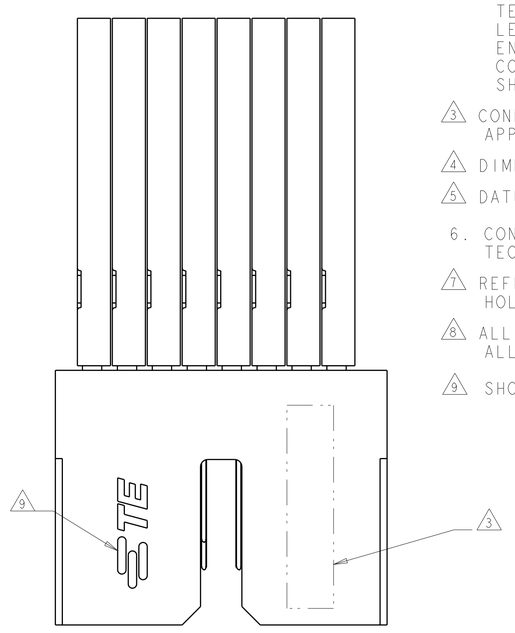

1. MATERIAL:
   CONTACT AND SHIELD: PHOS BRONZE
   HOUSING AND CHICKLET: LCP, UL 94V-0, COLOR: BLACK
2. FINISH:
   CONTACT AREA FINISH CONFORMS TO THE REQUIREMENTS OF TE PRODUCT SPECIFICATION 108-2303; BASED ON TELCORDIA GR-1217-CORE FOR SYSTEM QUALITY LEVEL III, APPLICATIONS IN CONTROLLED ENVIRONMENTS (CENTRAL OFFICE).
   COMPLIANT PIN AREA- 0.5µm MIN MATTE TIN OVER 1.27µm MIN NICKEL.
   SHIELD 1.27µm MIN NICKEL.
3. CONNECTOR MARKED WITH PART NUMBER, DATE CODE, AND STANDARD IN APPROXIMATE AREA SHOWN.
4. DIMENSION APPLIES TO CENTERLINE OF THRU HOLE.
5. DATUMS AND BASIC DIMENSIONS ESTABLISHED BY CUSTOMER.
6. CONTACT AREA LUBRICATED WITH BELLCORE APPROVED LUBRICANT. TECHNICAL REFERENCE: GR-1217-CORE, ISSUE 1, NOVERMBER 1995.
7. REFERENCE APPLICATION SPEC 114-13202 FOR RECOMMENDED PLATED THRU HOLE DIAMETER AND PLATING THICKNESS.
8. ALL GROUNDS IN ODD NUMBERED COLUMNS ARE COMMONED. ALL GROUNDS IN EVEN NUMBERED COLUMNS, EXCEPT FOR ROW A ARE COMMONED.
9. SHOWN LOGO OR OTHER TE OWNED LOGOS IN APPROXIAMATE AREA.

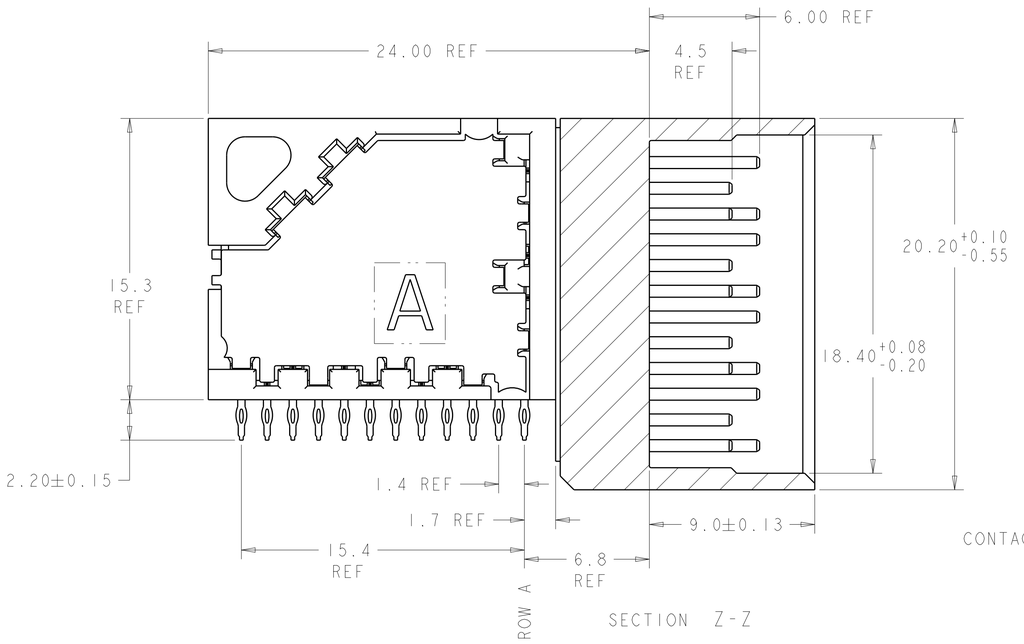

SECTION Z-Z

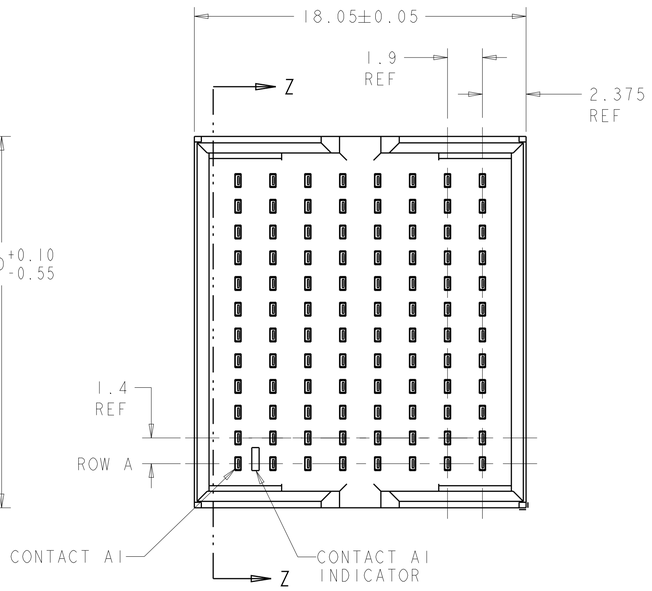

1934354-1
PART NUMBER

THIS DRAWING IS A CONTROLLED DOCUMENT.	DWN S.J.MAGARO 16AUG2007	TE Connectivity	
DIMENSIONS: mm	CHK W. DAVIS 16AUG2007	NAME	RIGHT ANGLE HEADER ASSEMBLY, DOUBLE WALL, 4 PAIR, 8 COLUMN, Z-PACK TinMan
TOLERANCES UNLESS OTHERWISE SPECIFIED: 0 PLC ±- 1 PLC ±- 2 PLC ±- 3 PLC ±- 4 PLC ±- ANGLES ±-	APVD R.PATTERSON 12OCT2007	PRODUCT SPEC -	
		APPLICATION SPEC -	SIZE A1 / CAGE CODE 00779 / DRAWING NO C-1934354 / RESTRICTED TO
MATERIAL - 1	FINISH - 2	WEIGHT -	CUSTOMER DRAWING / SCALE 6:1 / SHEET 1 OF 1 / REV D