THIS DRAWING IS UNPUBLISHED. RELEASED FOR PUBLICATION – ,– .
© COPYRIGHT – By – ALL RIGHTS RESERVED.

LOC	DIST
GP	00

REVISIONS

P	LTR	DESCRIPTION	DATE	DWN	APVD
	C	REV PER ECO-11-007678	16MAY2011	RG	DO

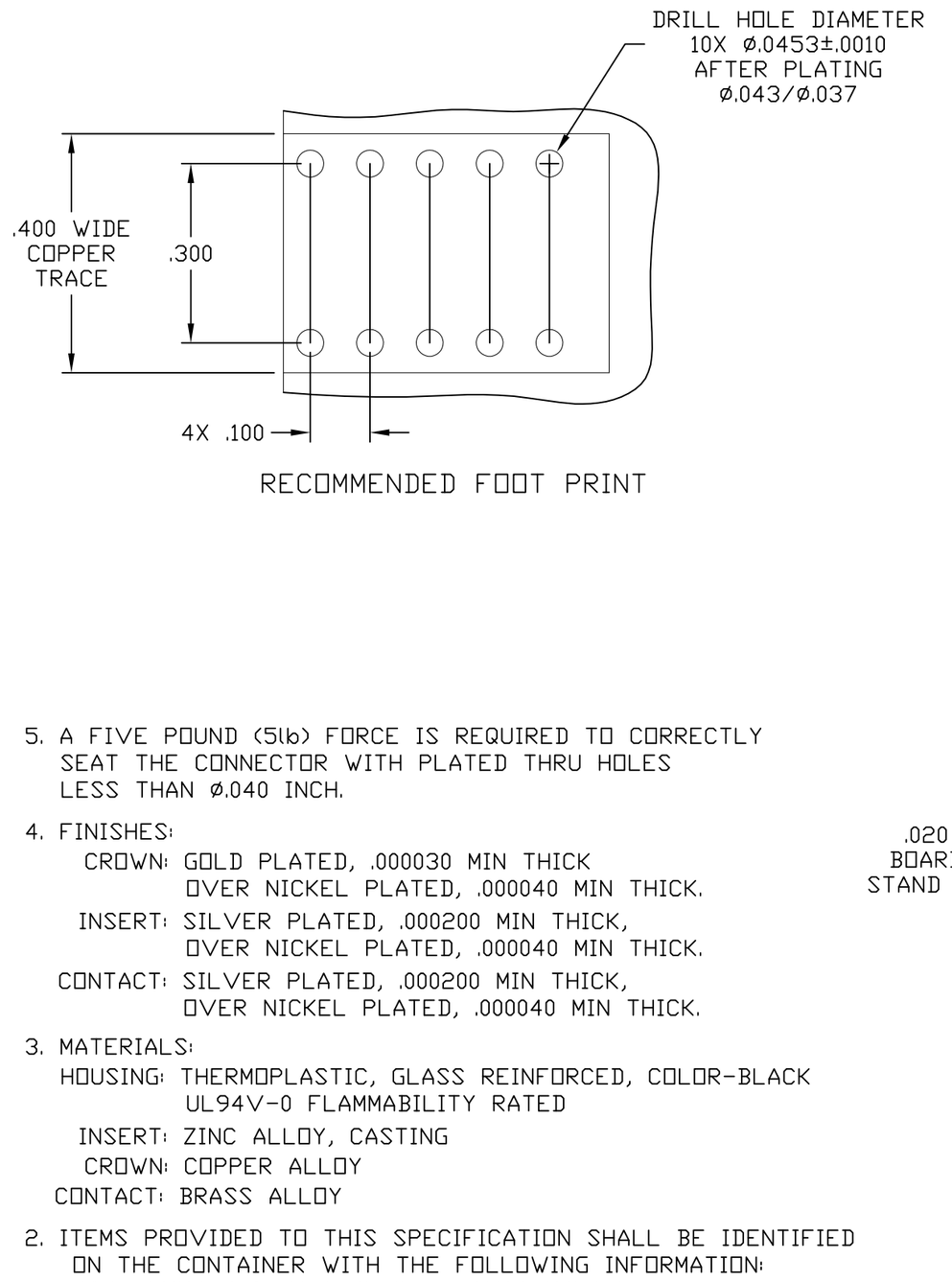

RECOMMENDED FOOT PRINT

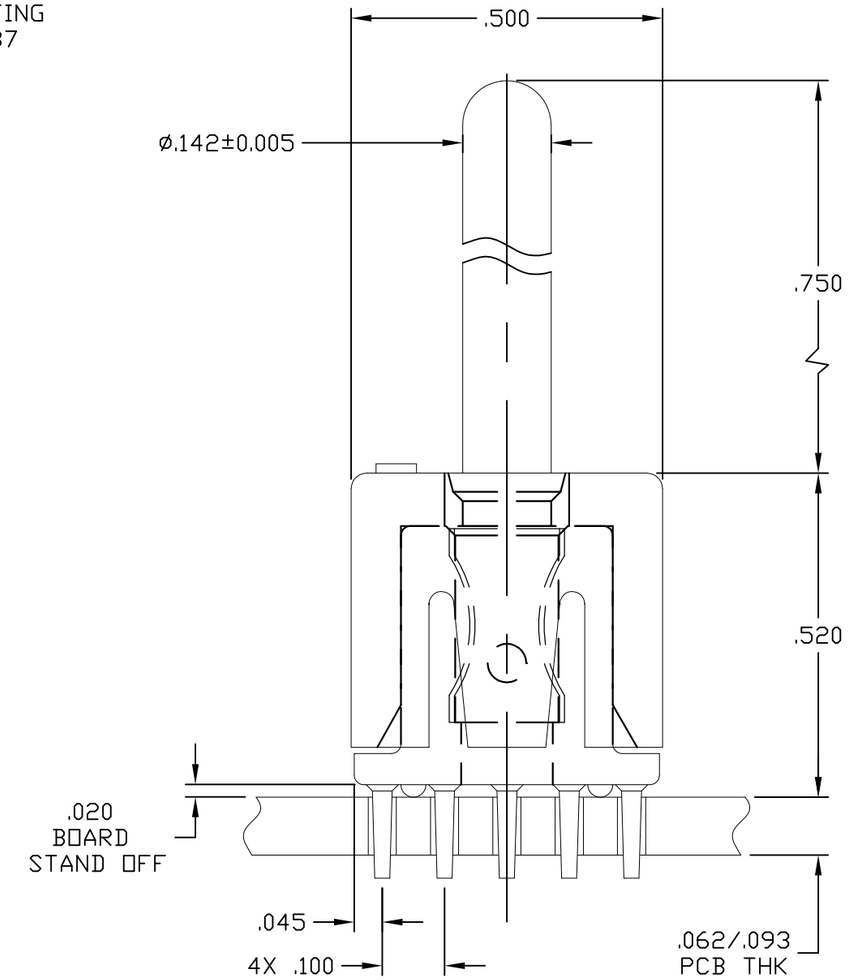

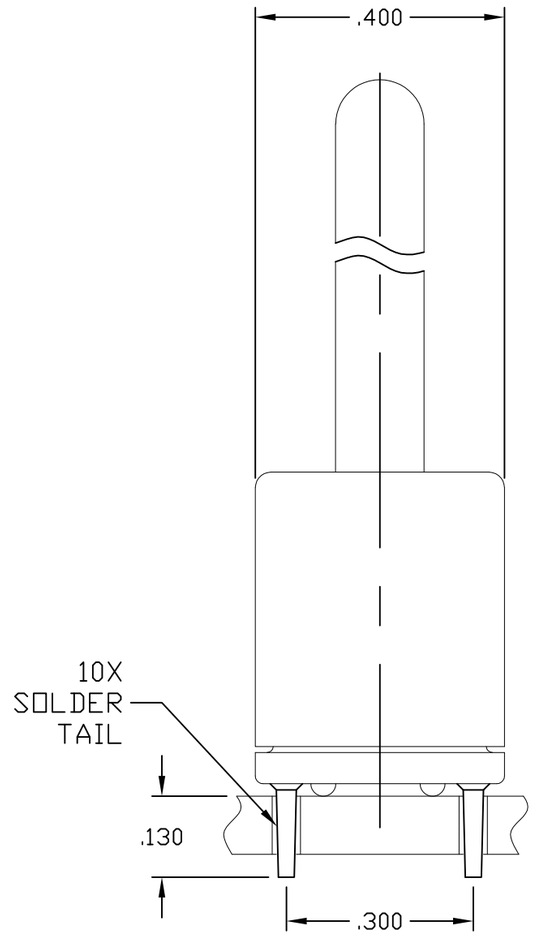

5. A FIVE POUND (5lb) FORCE IS REQUIRED TO CORRECTLY SEAT THE CONNECTOR WITH PLATED THRU HOLES LESS THAN ø.040 INCH.

4. FINISHES:
   - CROWN: GOLD PLATED, .000030 MIN THICK OVER NICKEL PLATED, .000040 MIN THICK.
   - INSERT: SILVER PLATED, .000200 MIN THICK, OVER NICKEL PLATED, .000040 MIN THICK.
   - CONTACT: SILVER PLATED, .000200 MIN THICK, OVER NICKEL PLATED, .000040 MIN THICK.

3. MATERIALS:
   - HOUSING: THERMOPLASTIC, GLASS REINFORCED, COLOR-BLACK UL94V-0 FLAMMABILITY RATED
   - INSERT: ZINC ALLOY, CASTING
   - CROWN: COPPER ALLOY
   - CONTACT: BRASS ALLOY

2. ITEMS PROVIDED TO THIS SPECIFICATION SHALL BE IDENTIFIED ON THE CONTAINER WITH THE FOLLOWING INFORMATION: PART NUMBER & DATE CODE OF MANUFACTURE.

1. PART NUMBER CHANGES AND OR DESIGN CHANGES AFFECTING ITEM INTERCHANGEABILITY REQUIRE PRIOR TE APPROVAL AND AUTHORIZATION BY REVISION TO THIS DRAWING.

6643437-1

PART NUMBER

THIS DRAWING IS A CONTROLLED DOCUMENT.

DIMENSIONS: INCHES

TOLERANCES UNLESS OTHERWISE SPECIFIED:

0 PLC	± –
1 PLC	± –
2 PLC	± .02
3 PLC	± .010
4 PLC	± –
ANGLES	± .5

MATERIAL: –

FINISH: –

DWN 12JAN2011 HA/GRZYBOWSKI
CHK – D.ORRIS
APVD 12JAN2011 FLICKINGER/ORIS
PRODUCT SPEC —
APPLICATION SPEC —
WEIGHT —

TE Connectivity

NAME
ICCON, PIN, No.8, PERPENDICULAR
SOLDER TAIL, 10 PIN FOOT PRINT
NON LOCKING STYLE, .750 PIN EXT

SIZE	CAGE CODE	DRAWING NO	RESTRICTED TO
A3	00779	C-6643437	—

CUSTOMER DRAWING

SCALE	SHEET	REV
4:1	1 OF 1	C