THIS DRAWING IS UNPUBLISHED. RELEASED FOR PUBLICATION -,- .
© COPYRIGHT - BY TYCO ELECTRONICS CORPORATION. ALL RIGHTS RESERVED.

LOC	DIST
AD	00

REVISIONS

P	LTR	DESCRIPTION	DATE	DWN	APVD
	A	RELEASED	06NOV2006	BC	GG
	B	ECR-10-019054	15SEP10	DP	MQW

CONNECTOR ASSEMBLY EXAMPLARY LOADED △9

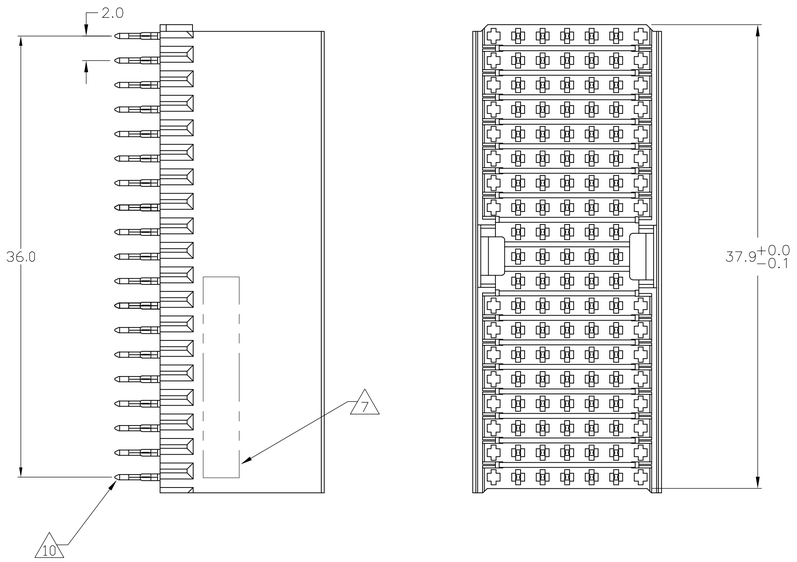

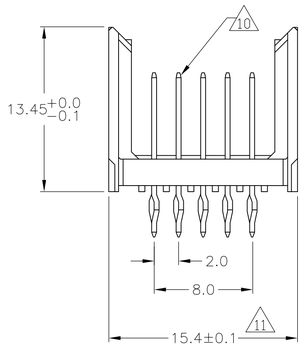

CONTACT DIMENSIONS

SCALE 5:1

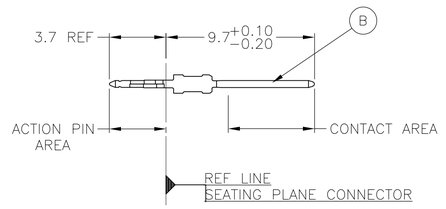

CONTACT LAYOUT

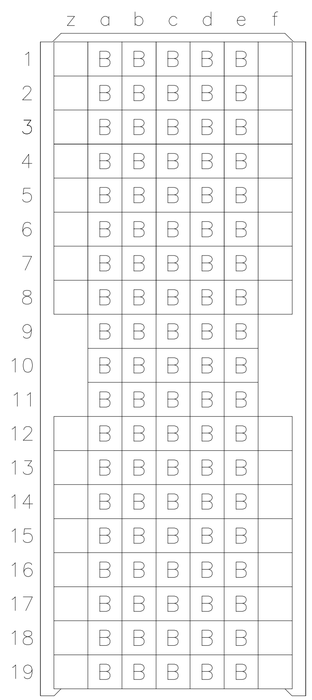

RECOMMENDED PCB-HOLE LAYOUT COMPONENT SIDE SHOWN

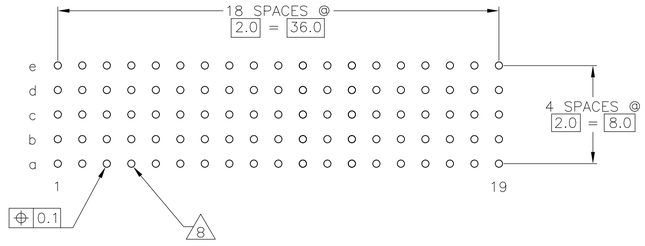

PLATED THRU HOLES PARAMETERS

REFERENCE APPLICATION SPECIFICATION

FINISH	PART NUMBER
△2 △6 △12	1-6392271-9
△2 △5 △12	6392271-9
△2 △4	6392271-4
△2 △3	6392271-1

THIS DRAWING IS A CONTROLLED DOCUMENT.

DIMENSIONS: mm

TOLERANCES UNLESS OTHERWISE SPECIFIED:
0 PLC ± —
1 PLC ± 0.1
2 PLC ± —
3 PLC ± —
4 PLC ± —
ANGLES ± —
±0.2

MATERIAL △1

FINISH SEE TABLE

DWN	B.CARBO 06NOV2006
CHK	G.GRIFFITH 06NOV2006
APVD	G.GRIFFITH 06NOV2006
PRODUCT SPEC	108-19082
APPLICATION SPEC	114-19029
WEIGHT	—

Tyco Electronics Corporation
Harrisburg, Pa 17105-3608

NAME: MALE ASSEMBLY, Z-PACK 2mm HM, TYPE A/B

SIZE	CAGE CODE	DRAWING NO	RESTRICTED TO
A1	00779	C-6392271	—

CUSTOMER DRAWING | SCALE 4:1 | SHEET 1 OF 2 | REV B

THIS DRAWING IS UNPUBLISHED. RELEASED FOR PUBLICATION -,- .
© COPYRIGHT - BY TYCO ELECTRONICS CORPORATION. ALL RIGHTS RESERVED.

LOC	DIST
AD	00

REVISIONS

P	LTR	DESCRIPTION	DATE	DWN	APVD
	—	SEE SHEET 1	-	—	—

△1 MATERIAL:
CONTACT: PHOSPHOR BRONZE.
HOUSING: GLASS-FILLED POLYESTER.

△2 GENERAL PLATING SPECIFICATION: UNDERPLATING
(ENTIRE CONTACT): 1.27µm MIN NICKEL AND ACTION
PIN: 0.5µm MIN TIN.
FOR PLATING OF MATING SURFACES SEE APPLICABLE
SPECIFICATION REFERENCE FOR EACH DASH NUMBER.

△3 CONFORMS TO ALL TESTING ACCORDING TO IEC 61076-4-101
PERFORMANCE LEVEL 2.

△4 CONFORMS TO ALL TESTING ACCORDING TO IEC 61076-4-101
PERFORMANCE LEVEL 1.

△5 CONNECTOR TESTED AND QUALIFIED AGAINST TELCORDIA GR-1217-CORE QUALITY LEVEL 3,
CENTRAL OFFICE APPLICATIONS.

△6 CONNECTOR TESTED AND QUALIFIED AGAINST TELCORDIA GR-1217-CORE QUALITY LEVEL 3,
UNCONTROLLED ENVIROMENT APPLICATIONS.

△7 CONNECTOR MARKED WITH PART NUMBER AND DATE CODE.
ADDITIONAL CHARACTERS OR MARKINGS, AS WELL AS THE LOCATION OF THE MARKINGS,
MAY BE ADDED FOR TRACEABILITY BASED UPON MANUFACTURERS DISCRETION.

△8 PLATED-THROUGH HOLES AT 2x2mm SQUARE GRID
PATTERN DEFINED BY CONTACT LAYOUT.

△9 FOR ACTUAL PIN LOADING SEE "CONTACT LAYOUT".

△10 FOR ACTUAL PIN DIMENSIONS SEE "CONTACT DIMENSIONS".

△11 TO BE MEASURED AT BOTTOM OF SHROUD.

△12 CONNECTOR LUBRICATED WITH BELCORE APPROVED LUBRICANT,
TECHNICAL REFERENCE: TR-NWT-001217 ISSUE 1, SEP 1992.

THIS DRAWING IS A CONTROLLED DOCUMENT.

DIMENSIONS: mm

TOLERANCES UNLESS OTHERWISE SPECIFIED:
0 PLC ± —
1 PLC ± 0.1
2 PLC ± —
3 PLC ± —
4 PLC ± —
ANGLES ± —
±0.2

MATERIAL: SEE SHEET 1
FINISH: SEE SHEET 1

DWN B.CARBO 06NOV2006
CHK G.GRIFFITH 06NOV2006
APVD G.GRIFFITH 06NOV2006
PRODUCT SPEC 108-19082
APPLICATION SPEC 114-19029
WEIGHT —

Tyco Electronics
Tyco Electronics Corporation
Harrisburg, Pa 17105-3608

NAME MALE ASSEMBLY, Z-PACK 2mm HM, TYPE A/B

SIZE	CAGE CODE	DRAWING NO	RESTRICTED TO
A1	00779	C-6392271	—

CUSTOMER DRAWING | SCALE 4:1 | SHEET 2 OF 2 | REV B