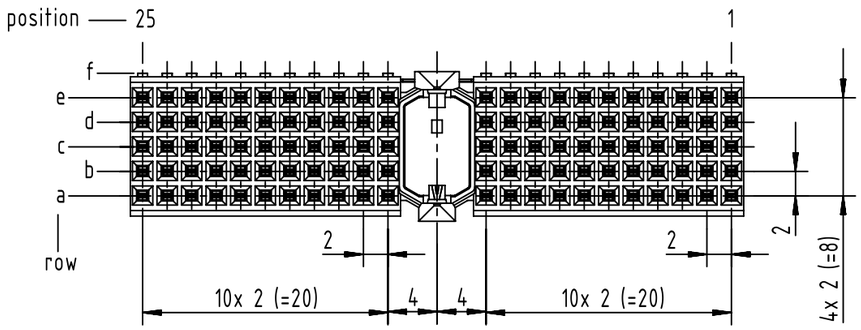

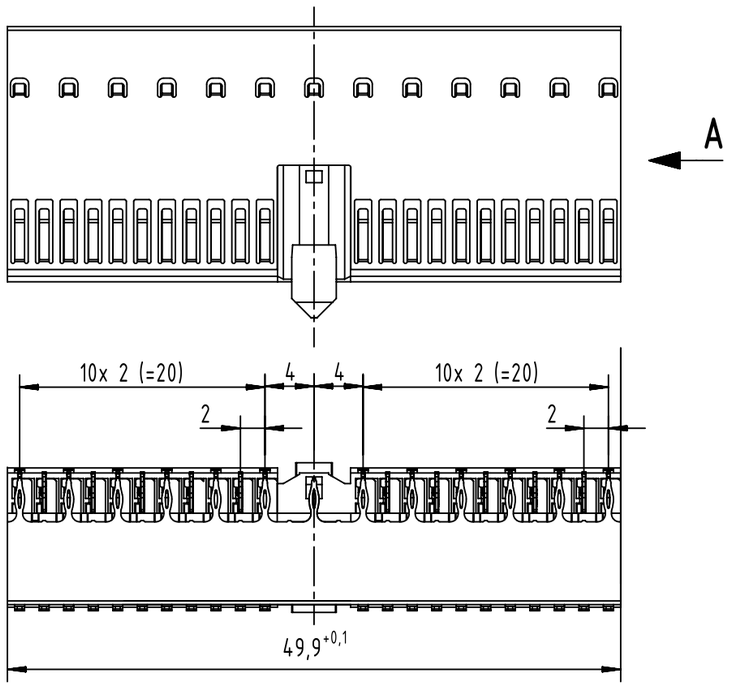

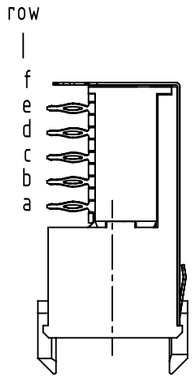

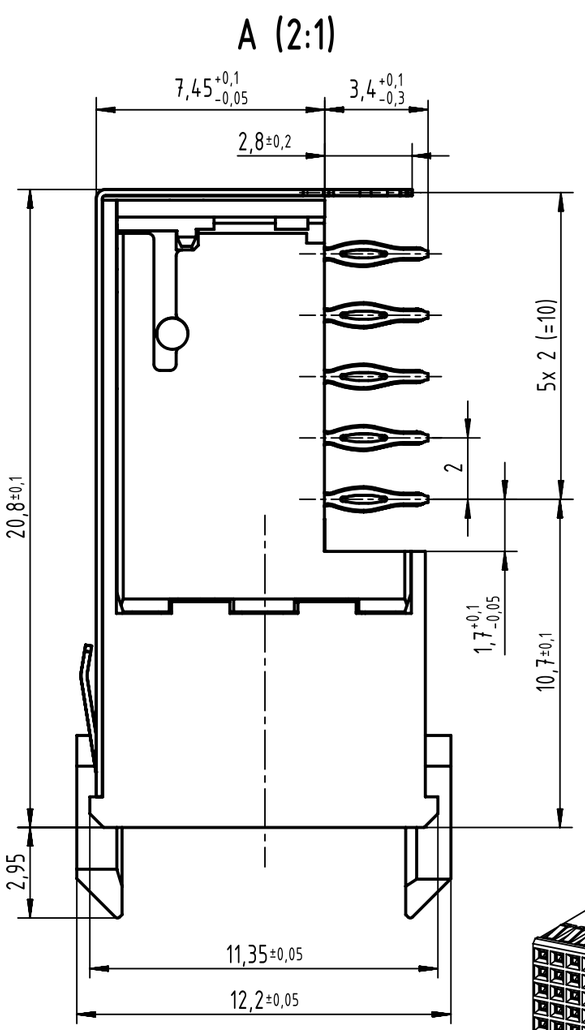

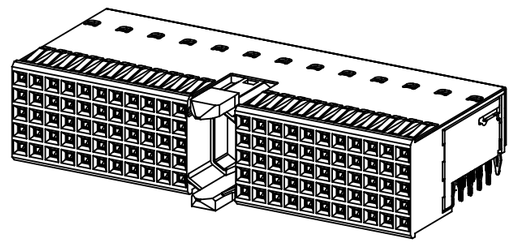

board drillings

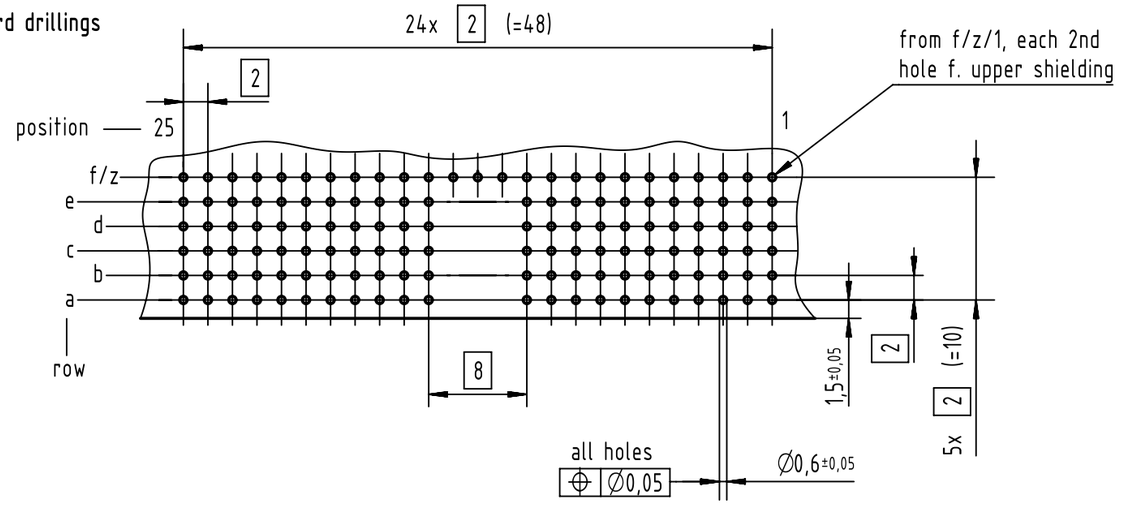

17 21 110 5102	Au50
17 21 110 4102	NM30 (S4)
17 21 110 2102	2
17 21 110 1102	1
part no.	performance level (1)

(1) recommended configuration of plated through holes and further information see: DS 17002200101

All Dimensions in mm
Original Size DIN A3

Scale 1:1

Free size tol. IEC 61076-4-101

Ref. Sub. TB 17 21 110 x102 / Mod. 35456 / 01.12.2008

All rights reserved

Department EL PD

HARTING Electronics GmbH
D-32339 Espelkamp

Created by STORCK | Inspected by LEHNERT | Standardisation HOFFMANN | Date 2018-05-15 | State Final Release

Title: har-bus HM female connector type A with shield

Doc-Key / ECM-Nr. 100119996/UGD/010/B 500000135160

Type TB | Number 1721110X102 | Rev. B | Page 1/1

A3