THIS DRAWING IS UNPUBLISHED. RELEASED FOR PUBLICATION -,- .
© COPYRIGHT - BY TYCO ELECTRONICS CORPORATION. ALL RIGHTS RESERVED.

LOC	DIST
AD	00

REVISIONS

P	LTR	DESCRIPTION	DATE	DWN	APVD
	C	REVISED PER ECN 0S12-0304-05	19JUN06	JDP	GES
	C1	REVISED PER ECO-09-021510	12SEP09	KK	AEG
	D	ECR-10-019054	15SEP10	SW	MQW
	E	ECR-12-009864	05DEC12	SY	AC

CONNECTOR ASSEMBLY EXAMPLARY LOADED (9)

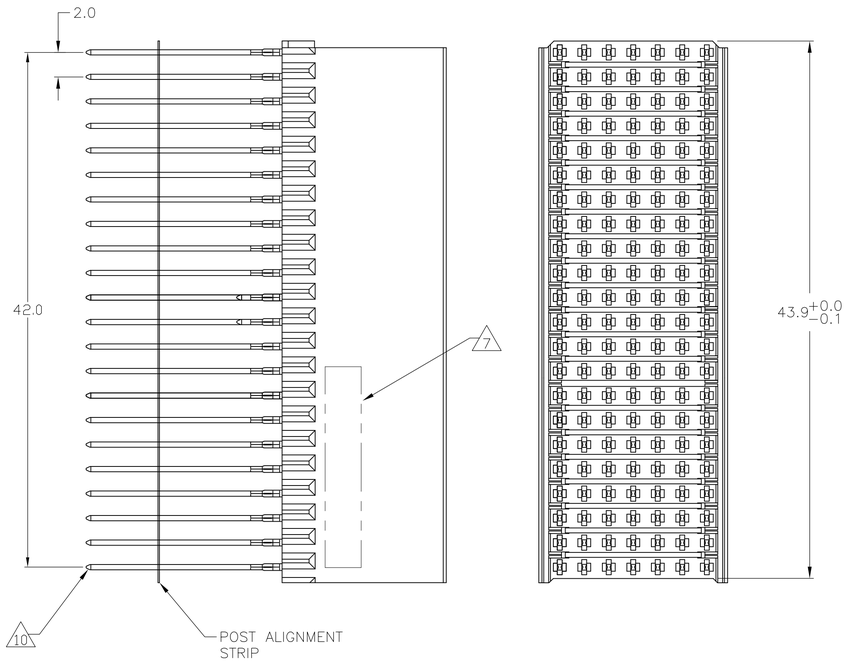

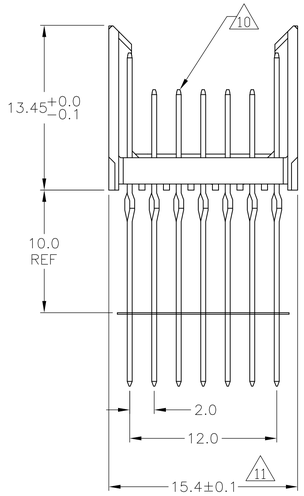

CONTACT DIMENSIONS

SCALE 5:1

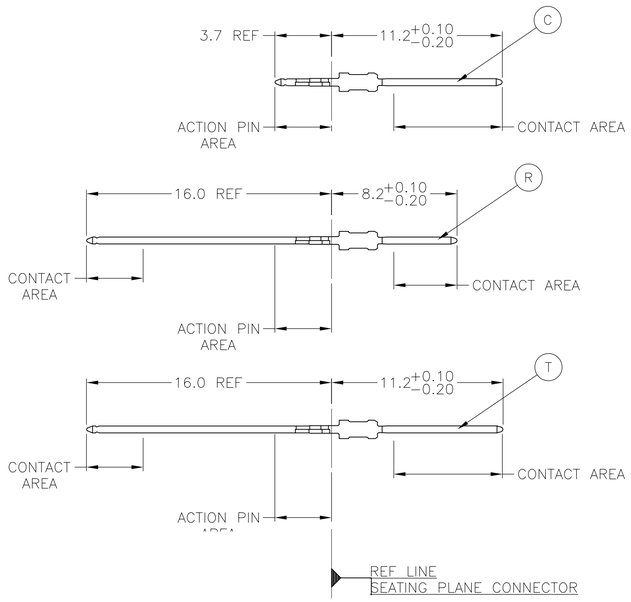

CONTACT LAYOUT

	z	a	b	c	d	e	f
1	T	R	R	R	R	R	T
2	T	R	R	R	R	R	T
3	T	R	R	R	R	R	T
4	T	R	R	R	R	R	T
5	T	R	R	R	R	R	T
6	T	R	R	R	R	R	T
7	T	R	R	R	R	R	T
8	T	R	R	R	R	R	T
9	T	R	R	R	R	R	T
10	T	R	R	R	R	R	T
11	C	R	R	R	R	R	C
12	C	R	R	R	R	R	C
13	T	R	R	R	R	R	T
14	T	R	R	R	R	R	T
15	T	R	R	R	R	R	T
16	T	R	R	R	R	R	T
17	T	R	R	R	R	R	T
18	T	R	R	R	R	R	T
19	T	R	R	R	R	R	T
20	T	R	R	R	R	R	T
21	T	R	R	R	R	R	T
22	T	R	R	R	R	R	T

RECOMMENDED PCB-HOLE LAYOUT
COMPONENT SIDE SHOWN

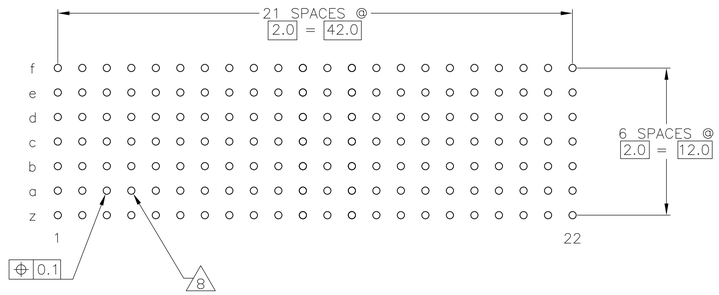

PLATED THRU HOLES PARAMETERS

REFERENCE APPLICATION SPECIFICATION

	FINISH	PART NUMBER
	2 6 12	1-352716-9
13 OBSOLETE	2 5 12	352716-9
	2 4	352716-4
OBSOLETE	2 3	352716-1

THIS DRAWING IS A CONTROLLED DOCUMENT.	DWN B.CARBO 28JUL05	Tyco Electronics	Tyco Electronics Corporation Harrisburg, Pa 17105-3608
DIMENSIONS: mm	CHK G.SKIPPER 28JUL05	NAME	MALE ASSEMBLY, Z-PACK 2mm HM, TYPE B
TOLERANCES UNLESS OTHERWISE SPECIFIED: 0 PLC ± —; 1 PLC ± 0.1; 2 PLC ± —; 3 PLC ± —; 4 PLC ± —; ANGLES ± — ±0.2	APVD G.SKIPPER 28JUL05	PRODUCT SPEC	108-19082
		APPLICATION SPEC	114-19029
MATERIAL 1	FINISH SEE TABLE	WEIGHT —	SIZE A1 · CAGE CODE 00779 · DRAWING NO C-352716 · RESTRICTED TO —
		CUSTOMER DRAWING	SCALE 4:1 · SHEET 1 OF 2 · REV E

THIS DRAWING IS UNPUBLISHED. RELEASED FOR PUBLICATION -,- .
© COPYRIGHT - BY TYCO ELECTRONICS CORPORATION. ALL RIGHTS RESERVED.

LOC	DIST
AD	00

REVISIONS

P	LTR	DESCRIPTION	DATE	DWN	APVD
	—	SEE SHEET 1	-	—	—

1. MATERIAL:
   CONTACT: PHOSPHOR BRONZE.
   HOUSING: GLASS-FILLED POLYESTER.

2. GENERAL PLATING SPECIFICATION: UNDERPLATING
   (ENTIRE CONTACT): 1.27µm MIN NICKEL AND ACTION
   PIN: 0.5µm MIN TIN/LEAD.
   FOR PLATING OF MATING SURFACES SEE APPLICABLE
   SPECIFICATION REFERENCE FOR EACH DASH NUMBER.

3. CONFORMS TO ALL TESTING ACCORDING TO IEC 61076-4-101
   PERFORMANCE LEVEL 2.

4. CONFORMS TO ALL TESTING ACCORDING TO IEC 61076-4-101
   PERFORMANCE LEVEL 1.

5. CONNECTOR TESTED AND QUALIFIED AGAINST TELCORDIA GR-1217-CORE QUALITY LEVEL 3,
   CENTRAL OFFICE APPLICATIONS.

6. CONNECTOR TESTED AND QUALIFIED AGAINST TELCORDIA GR-1217-CORE QUALITY LEVEL 3,
   UNCONTROLLED ENVIROMENT APPLICATIONS.

7. CONNECTOR MARKED WITH PART NUMBER AND DATE CODE.
   ADDITIONAL CHARACTERS OR MARKINGS, AS WELL AS THE LOCATION OF THE MARKINGS,
   MAY BE ADDED FOR TRACEABILITY BASED UPON MANUFACTURERS DISCRETION.

8. PLATED-THROUGH HOLES AT 2x2mm SQUARE GRID
   PATTERN DEFINED BY CONTACT LAYOUT.

9. FOR ACTUAL PIN LOADING SEE "CONTACT LAYOUT".

10. FOR ACTUAL PIN DIMENSIONS SEE "CONTACT DIMENSIONS".

11. TO BE MEASURED AT BOTTOM OF SHROUD.

12. CONNECTOR LUBRICATED WITH BELCORE APPROVED LUBRICANT,
    TECHNICAL REFERENCE: TR-NWT-001217 ISSUE 1, SEP 1992.

13. OBSOLETE PARTS: OBSOLETE CIS STREAMLINING PER D.RENAUD/D.SINISI

THIS DRAWING IS A CONTROLLED DOCUMENT.

DIMENSIONS: mm

TOLERANCES UNLESS OTHERWISE SPECIFIED:
0 PLC ± —
1 PLC ± 0.1
2 PLC ± —
3 PLC ± —
4 PLC ± —
ANGLES ± —
±0.2

MATERIAL: SEE SHEET 1
FINISH: SEE SHEET 1

DWN	B.CARBO	28JUL05
CHK	G.SKIPPER	28JUL05
APVD	G.SKIPPER	28JUL05
PRODUCT SPEC	108-19082	
APPLICATION SPEC	114-19029	
WEIGHT	—	

Tyco Electronics
Tyco Electronics Corporation
Harrisburg, Pa 17105-3608

NAME: MALE ASSEMBLY, Z-PACK 2mm HM, TYPE B

SIZE	CAGE CODE	DRAWING NO	RESTRICTED TO
A1	00779	C-352716	—

CUSTOMER DRAWING | SCALE 4:1 | SHEET 2 OF 2 | REV E