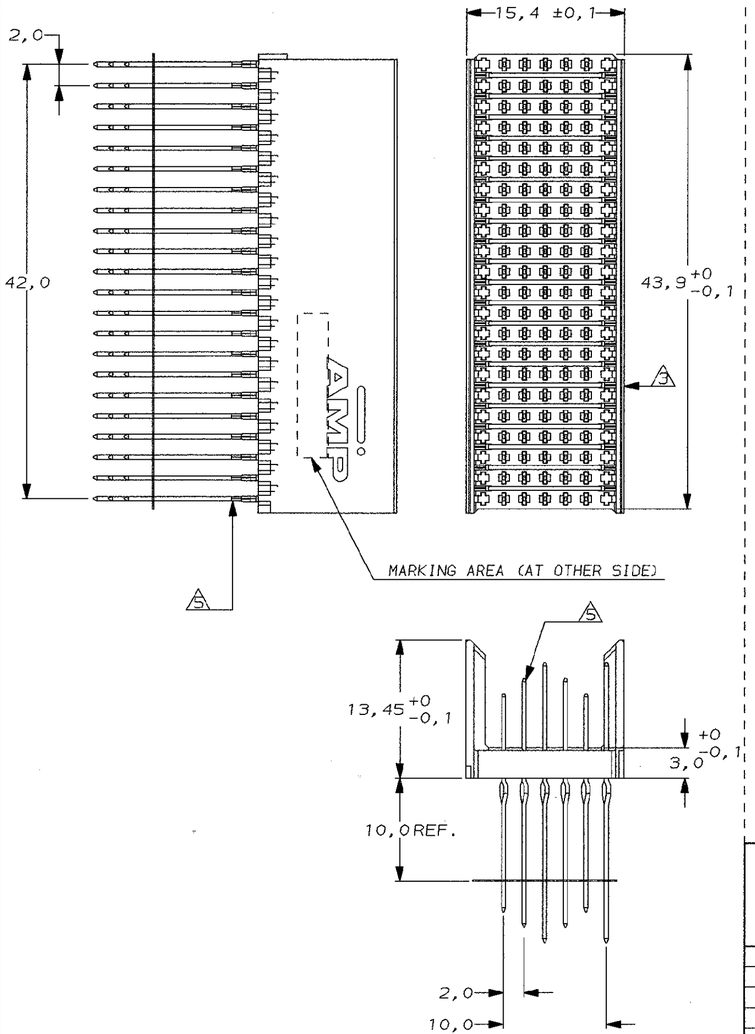
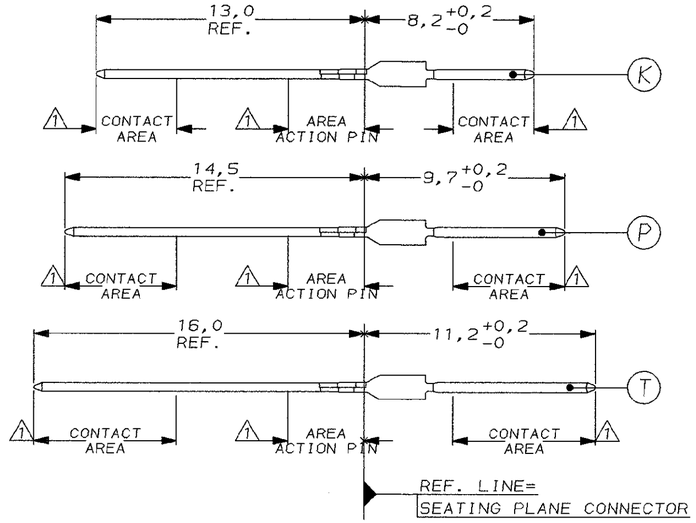
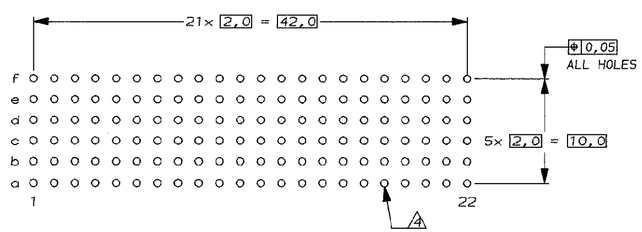
CONNECTOR ASSEMBLY
EXEMPLARY LOADED



CONTACT DIMENSIONS



PART NO.	PLATING TABLE 1			
	UNDER-COATING µm Ni MIN.	CONTACT AREA µm Au MIN.	ACTION-PIN AREA µm	–
352360-1	1,3	0,8	0,5-2,5 Sn/Pb	–
–	–	–	–	–
–	–	–	–	–
–	–	–	–	–
–	–	–	–	–



RECOMMENDED PCB-HOLE LAY-OUT

COMPONENT SIDE SHOWN

P.C.B. HOLE DIM. ACTION PIN

DRILLED HOLE	:	0,7±0,025mm
FIN. HOLE	:	0,55 TO 0,65mm
Cu-thks	:	0,025 TO 0,050mm
SnPb-thks	:	0,004 TO 0,010mm

NOTES:

1. FOR FINISH TYPES SEE PLATING TABLE.
2. MATERIAL CONTACT: PHOSPHORBRONZE.
   MATERIAL HOUSING: GREY GLASSFILLED POLYESTER
   MATERIAL POST ALIGMENT STRIP: UNFILLED POLYESTER.
3. CONNECTOR MARKED WITH PART NUMBER AND DATE CODE.
4. PLATED-THROUGH HOLES AT 2x2mm SQUARE GRID, TOTAL 132 HOLES.
5. FOR ACTUAL PIN LOADING SEE "CONTACT LAYOUT".

DO NOT SCALE — DIMENSIONS IN mm

METRIC

THIRD ANGLE PROJECTION

CONTACT LAYOUT

	z	a	b	c	d	e	f
1		K	K	K	K	K	T
2		K	K	K	K	K	T
3		K	K	K	K	K	T
4		K	K	K	K	K	T
5		K	K	K	K	K	T
6		K	K	K	K	K	T
7		K	K	K	K	K	T
8		K	K	K	K	K	T
9		K	K	K	K	K	T
10		K	K	K	K	K	T
11		K	K	K	K	K	T
12		K	K	K	K	K	T
13		K	K	K	K	K	T
14		K	K	K	K	K	T
15		K	K	K	K	K	T
16		K	K	K	K	K	T
17		K	K	K	K	K	T
18		K	K	K	K	K	T
19		P	P	P	P	P	T
20		P	P	P	P	P	T
21		P	P	P	P	P	T
22		P	P	P	P	P	T

–							–
–							–
–							–
–							–
–				1		2	352360-1
–				FINISH		MATERIAL	PART NUMBER
–	–	–	–	–	–		
–	–	–	–	–	–		
–	–	–	–	–	–		
–	–	–	–	–	–		
B	EH-0342-00	HHO	LvdR	10-MAR-00			
A	EH-0458-99	LvdH	LvdR	08-MAR-99			
0	–	LvdH	WvdH	27-FEB-98			
LTR.	REVISION RECORD	DR.	CHK.	DATE			

CUSTOMER DRAWING — FOR REFERENCE ONLY WILL NOT BE UPDATED
© COPYRIGHT 1999 BY AMP HOLLAND B.V.
ALL INTERNATIONAL RIGHTS RESERVED. AMP PRODUCTS MAY BE COVERED BY U.S. AND FOREIGN AND/OR PATENTS PENDING.
THIS DRAWING IS UNPUBLISHED
~~RELEASED FOR PUBLICATION ,19~~

AMP HOLLAND B.V.
's-Hertogenbosch,
The Netherlands.

NAME: Z-PACK 2mm HM TYPE B
132 POS. MALE
CONNECTOR ASSEMBLY 22 COLUMNS

DR.: L.V.D.HEIJDEN	CHK.: v.d.HEIJDEN	APP.: F.V.KONINGSBRUGGE
DATE: 27-FEB-98	DATE: 27-FEB-98	DATE: –

DWG. No.	REV. LTR.	SHEET	
C-352360	B	1 OF 1	A2

R6-129 (REV.04-91)

11 10 9 8 7 6 5 4 3 2 1

G F E D C B A