THIS DRAWING IS UNPUBLISHED. RELEASED FOR PUBLICATION -;- .
© COPYRIGHT - BY TYCO ELECTRONICS CORPORATION. ALL RIGHTS RESERVED.

| LOC | DIST |
|---|---|
| AD | 00 |

REVISIONS

| P | LTR | DESCRIPTION | DATE | DWN | APVD |
|---|---|---|---|---|---|
| | C | REVISED PER ECN 0S12-0305-05 | 27APR06 | JDP | GES |
| | D | ECR-10-019054 | 15SEP10 | DP | MQW |
| | E | ECR-12-009864 | 05DEC12 | SY | AC |

## CONNECTOR ASSEMBLY EXAMPLARY LOADED (9)

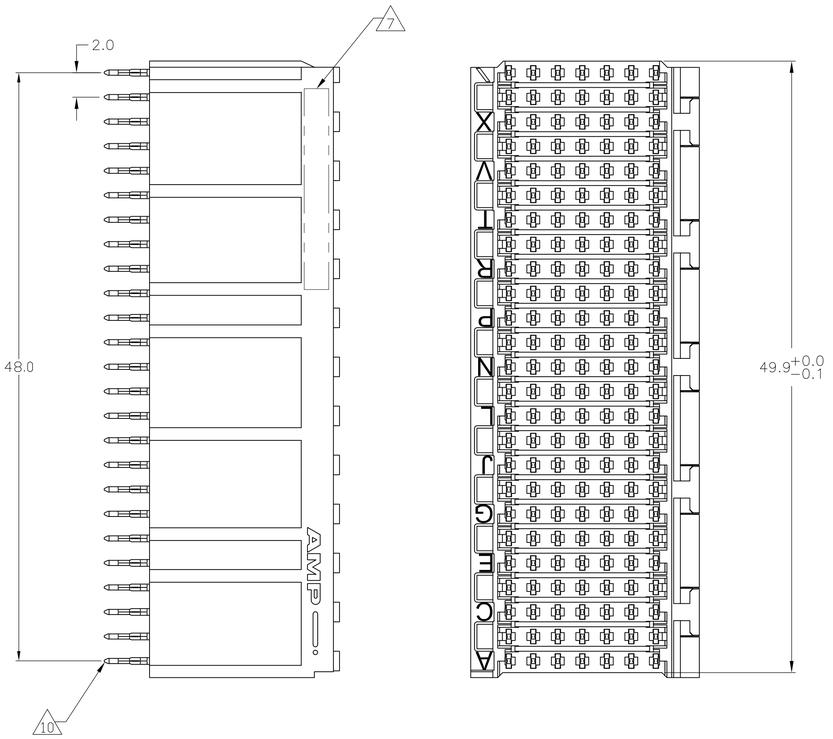


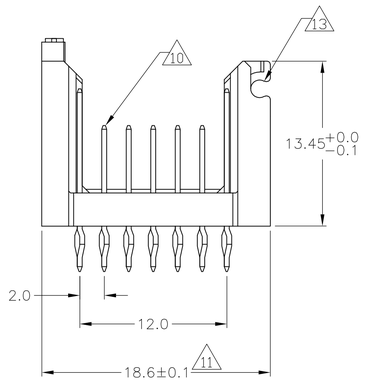


## CONTACT DIMENSIONS

SCALE 5:1

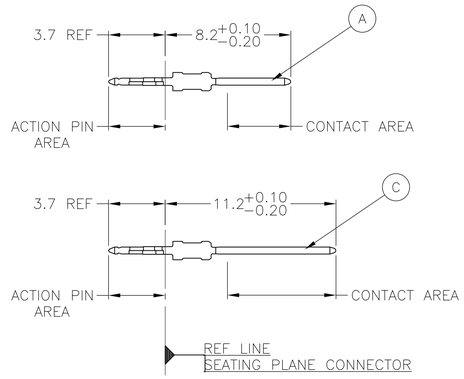


## CONTACT LAYOUT

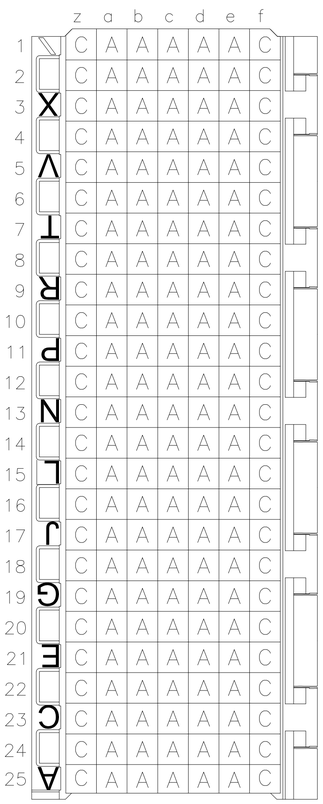


## RECOMMENDED PCB-HOLE LAYOUT
COMPONENT SIDE SHOWN

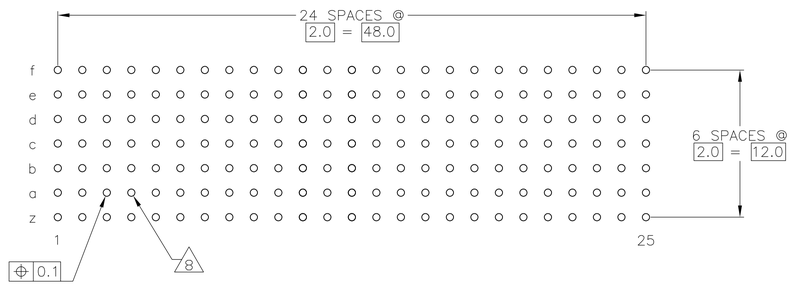


## PLATED THRU HOLES PARAMETERS

REFERENCE APPLICATION SPECIFICATION

| | FINISH | PART NUMBER |
|---|---|---|
| | (2)(6)(12) | 1-5352901-9 |
| | (2)(5)(12) | 5352901-9 |
| | (2)(4) | 5352901-4 |
| OBSOLETE | (2)(3) | ~~5352901-1~~ |

| | | |
|---|---|---|
| THIS DRAWING IS A CONTROLLED DOCUMENT. | DWN B.CARBO 31AUG05 | Tyco Electronics Corporation Harrisburg, Pa 17105-3608 |
| DIMENSIONS: mm | CHK G.SKIPPER 31AUG05 | |
| TOLERANCES UNLESS OTHERWISE SPECIFIED: 0 PLC ± 1; 1 PLC ± 0.1; 2 PLC ± .; 3 PLC ± .; 4 PLC ± .; ANGLES ± . ±0.2 | APVD G.SKIPPER 31AUG05 | NAME Z-PACK 2mm HM, STAND ALONE ACE CODED CABLE CONNECTOR HEADER |
| | PRODUCT SPEC 108-19082 | |
| | APPLICATION SPEC 114-19029 | SIZE A1 · CAGE CODE 00779 · DRAWING NO C-352901 · RESTRICTED TO — |
| MATERIAL (1) | WEIGHT — | SCALE 4:1 · SHEET 1 OF 2 · REV E |
| FINISH SEE TABLE | CUSTOMER DRAWING | |

THIS DRAWING IS UNPUBLISHED. RELEASED FOR PUBLICATION -,- .
© COPYRIGHT - BY TYCO ELECTRONICS CORPORATION. ALL RIGHTS RESERVED.

| LOC | DIST |
|---|---|
| AD | 00 |

REVISIONS

| P | LTR | DESCRIPTION | DATE | DWN | APVD |
|---|---|---|---|---|---|
| | — | SEE SHEET 1 | – | — | — |

1. MATERIAL:
   CONTACT: PHOSPHOR BRONZE.
   HOUSING: GLASS-FILLED POLYESTER.

2. GENERAL PLATING SPECIFICATION: UNDERPLATING
   (ENTIRE CONTACT): 1.27µm MIN NICKEL AND ACTION
   PIN: 0.5µm MIN TIN/LEAD.
   FOR PLATING OF MATING SURFACES SEE APPLICABLE
   SPECIFICATION REFERENCE FOR EACH DASH NUMBER.

3. CONFORMS TO ALL TESTING ACCORDING TO IEC 61076-4-101
   PERFORMANCE LEVEL 2.

4. CONFORMS TO ALL TESTING ACCORDING TO IEC 61076-4-101
   PERFORMANCE LEVEL 1.

5. CONNECTOR TESTED AND QUALIFIED AGAINST TELCORDIA GR-1217-CORE QUALITY LEVEL 3,
   CENTRAL OFFICE APPLICATIONS.

6. CONNECTOR TESTED AND QUALIFIED AGAINST TELCORDIA GR-1217-CORE QUALITY LEVEL 3,
   UNCONTROLLED ENVIROMENT APPLICATIONS.

7. CONNECTOR MARKED WITH PART NUMBER AND DATE CODE.
   ADDITIONAL CHARACTERS OR MARKINGS, AS WELL AS THE LOCATION OF THE MARKINGS,
   MAY BE ADDED FOR TRACEABILITY BASED UPON MANUFACTURERS DISCRETION.

8. PLATED-THROUGH HOLES AT 2x2mm SQUARE GRID
   PATTERN DEFINED BY CONTACT LAYOUT.

9. FOR ACTUAL PIN LOADING SEE "CONTACT LAYOUT".

10. FOR ACTUAL PIN DIMENSIONS SEE "CONTACT DIMENSIONS".

11. TO BE MEASURED AT BOTTOM OF SHROUD.

12. CONNECTOR LUBRICATED WITH BELCORE APPROVED LUBRICANT,
    TECHNICAL REFERENCE: TR-NWT-001217 ISSUE 1, SEP 1992.

13. FITS SNAP LATCH P/N 352706-1.

THIS DRAWING IS A CONTROLLED DOCUMENT.

DIMENSIONS: mm

TOLERANCES UNLESS OTHERWISE SPECIFIED:
0 PLC ± —
1 PLC ± 0.1
2 PLC ± —
3 PLC ± —
4 PLC ± —
ANGLES ± —
±0.2

MATERIAL: SEE SHEET 1
FINISH: SEE SHEET 1

DWN B.CARBO 31AUG05
CHK G.SKIPPER 31AUG05
APVD G.SKIPPER 31AUG05
PRODUCT SPEC 108-19082
APPLICATION SPEC 114-19029
WEIGHT —

Tyco Electronics Corporation
Harrisburg, Pa 17105-3608

NAME
Z-PACK 2mm HM,
STAND ALONE ACE CODED
CABLE CONNECTOR HEADER

| SIZE | CAGE CODE | DRAWING NO | RESTRICTED TO |
|---|---|---|---|
| A1 | 00779 | C-352901 | — |

CUSTOMER DRAWING | SCALE 4:1 | SHEET 2 OF 2 | REV E