THIS DRAWING IS UNPUBLISHED. RELEASED FOR PUBLICATION -,- .
© COPYRIGHT - BY TYCO ELECTRONICS CORPORATION. ALL RIGHTS RESERVED.

LOC	DIST
H	—

REVISIONS

P	LTR	DESCRIPTION	DATE	DWN	APVD
	C	ECO-11-024491	13DEC11	SY	MQW

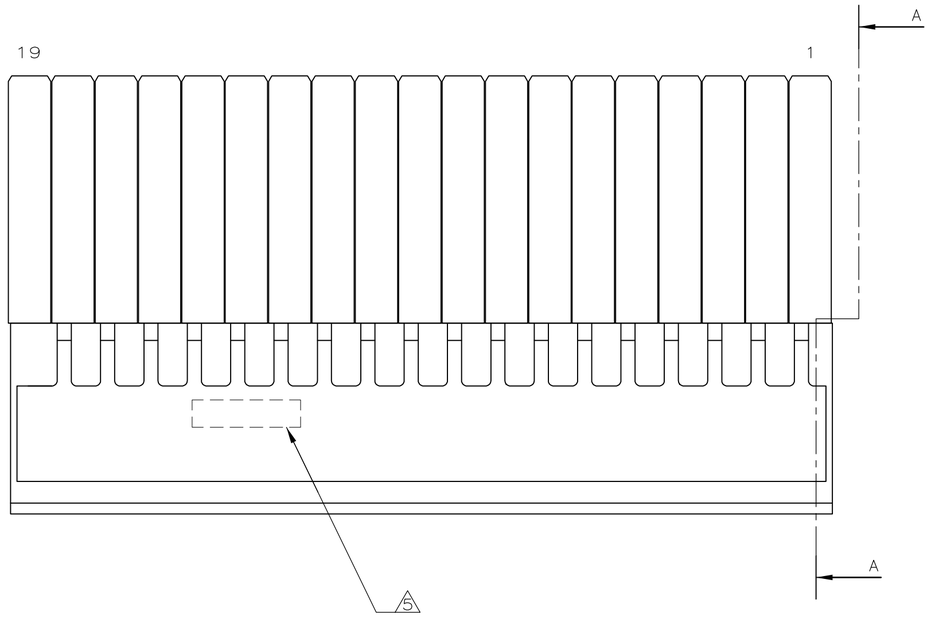

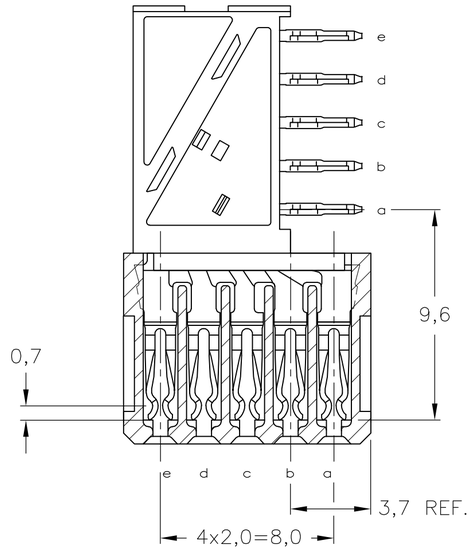

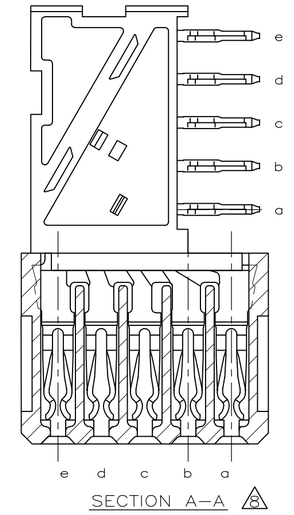

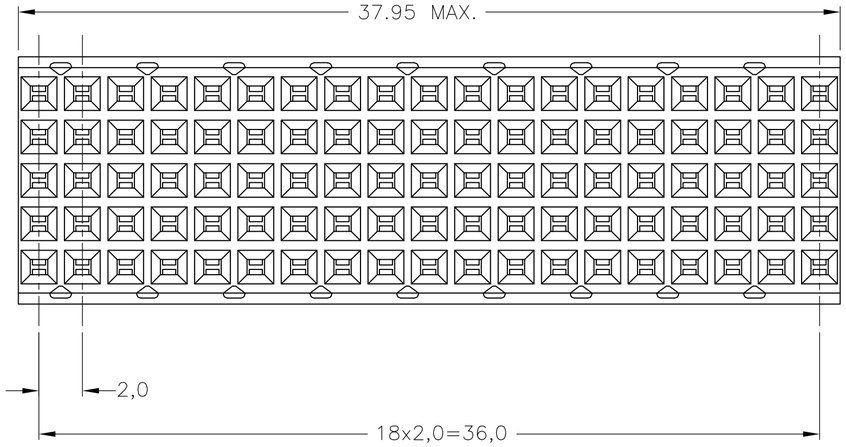

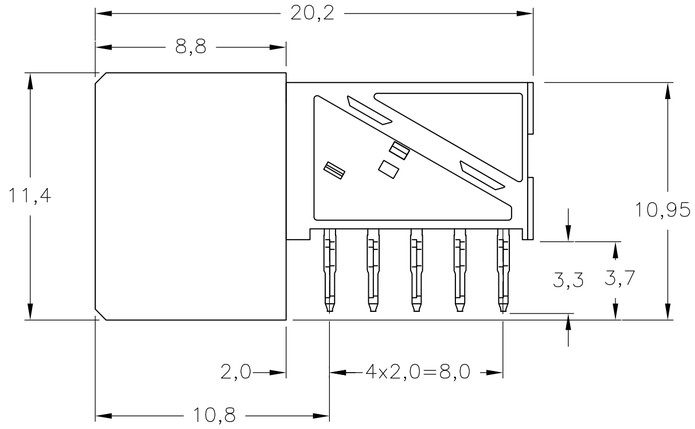

NOTES:

1. MATERIAL CONTACT; PHOSPHORBRONZE
   MATERIAL HOUSING;
   GLASSFILLED POLYESTER UL-RATING 94V0 (GRAY)
2. GENERAL PLATING SPECIFICATION: UNDERPLATING (ENTIRE CONTACT):
   1,27µm NICKEL MIN.AND ACTION PIN: 0,5µm TIN MIN.
   FOR PLATING OF MATING SURFACES SEE APPLICABLE SPECIFICATION
   REFERENCE FOR EACH DASH NUMBER.
3. CONFORMS TO ALL TESTING ACCORDING IEC 61076-4-101 PERFORMANCE LEVEL 2.
4. CONFORMS TO ALL TESTING ACCORDING IEC 61076-4-101 PERFORMANCE LEVEL 1.
5. CONNECTOR PRINTED WITH PARTNUMBER AND DATECODE
   THE MARKING CAN APPEAR ON THE FRONT SIDE OR ON
   THE BACK SIDE.
6. PLATED-THROUGH HOLES AT 2x2mm SQUARE GRID. 95 HOLES
7. FITS WITH INTEGRATED GROUND RETURN UPPERSHIELD, BASIC P.N. 5352028
   AND INTEGRATED GROUND RETURN LOWERSHIELD, BASIC P.N. 5352029
8. CONNECTOR ASSEMBLED WITH REDESIGNED CONTACTS.
   CONTACTS HAVE A CORING-OUT IN THE PLASTIC.

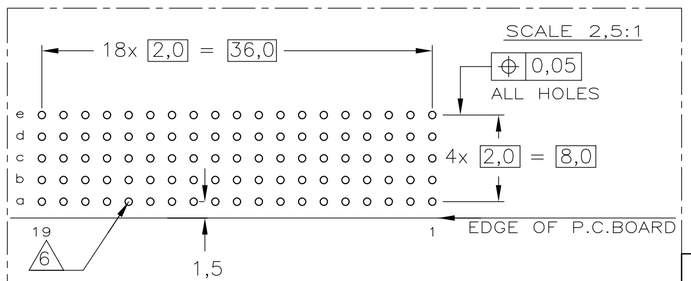

COMPONENT SIDE AS SHOWN
RECOMMENDED PCB-HOLE LAY-OUT

P.C.B. HOLE DIM. ACTION PIN
FOR DETAILS SEE
APPLICATION SPECIFICATION

2 4	1	5352009-4 8
2 3	1	5352009-1 8
FINISH	MATERIAL	PARTNUMBER

THIS DRAWING IS A CONTROLLED DOCUMENT.

DIMENSIONS: mm

TOLERANCES UNLESS OTHERWISE SPECIFIED:
0 PLC ± –
1 PLC ± –
2 PLC ± –
3 PLC ± –
4 PLC ± –
ANGLES ± –

MATERIAL –
FINISH –

DWN K.N.KIRAN 13AUG2004
CHK B.MOOIJ 22MAR2005
APVD B.MOOIJ 22MAR2005
PRODUCT SPEC 108-19082
APPLICATION SPEC 114-19029
WEIGHT –

Tyco Electronics Corporation
's-Hertogenbosch,5222AR-32

NAME
Z-PACK 2mm HM 95 POS. (19 COLUMNS)
FEMALE DAUGHTER CARD CONNECTOR
–

SIZE	CAGE CODE	DRAWING NO	RESTRICTED TO
A2	00779	C-5352009	–

CUSTOMER DRAWING | SCALE 5:1 | SHEET 1 OF 1 | REV C

5352009