THIS DRAWING IS UNPUBLISHED. RELEASED FOR PUBLICATION -,- .
© COPYRIGHT - By - ALL RIGHTS RESERVED.

LOC	DIST
AD	00

REVISIONS

P	LTR	DESCRIPTION	DATE	DWN	APVD
	F2	REV PER ECO-10-001916	02FEB2010	JY	SY
	G	ECR-10-018652	10SEP10	JS	MQW
	H1	ECR-13-016193	17OCT13	DS	MY

CONNECTOR ASSEMLBY EXAMPLARY LOADED △9

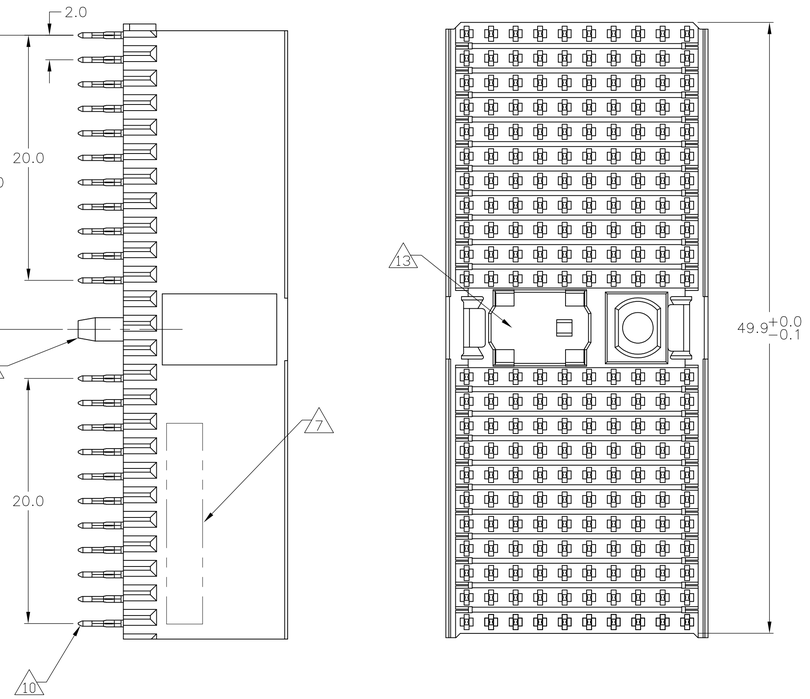

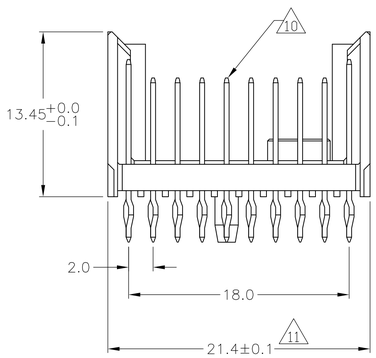

CONTACT DIMENSIONS

SCALE 5:1

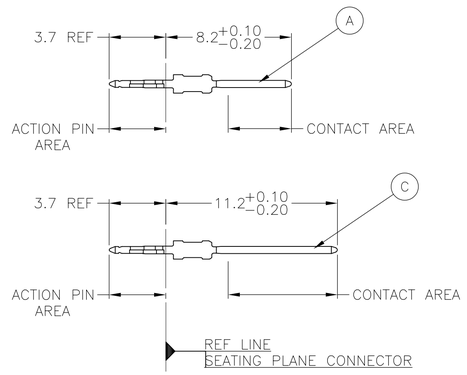

CONTACT LAYOUT

	z	a	b	c	d	e	f	g	h	i
1	C	A	A	A	A	A	A	A	A	C
2	C	A	A	A	A	A	A	A	A	C
3	C	A	A	A	A	A	A	A	A	C
4	C	A	A	A	A	A	A	A	A	C
5	C	A	A	A	A	A	A	A	A	C
6	C	A	A	A	A	A	A	A	A	C
7	C	A	A	A	A	A	A	A	A	C
8	C	A	A	A	A	A	A	A	A	C
9	C	A	A	A	A	A	A	A	A	C
10	C	A	A	A	A	A	A	A	A	C
11	C	A	A	A	A	A	A	A	A	C
	MULTI PURPOSE CENTER									
15	C	A	A	A	A	A	A	A	A	C
16	C	A	A	A	A	A	A	A	A	C
17	C	A	A	A	A	A	A	A	A	C
18	C	A	A	A	A	A	A	A	A	C
19	C	A	A	A	A	A	A	A	A	C
20	C	A	A	A	A	A	A	A	A	C
21	C	A	A	A	A	A	A	A	A	C
22	C	A	A	A	A	A	A	A	A	C
23	C	A	A	A	A	A	A	A	A	C
24	C	A	A	A	A	A	A	A	A	C
25	C	A	A	A	A	A	A	A	A	C

RECOMMENDED PCB-HOLE LAYOUT
COMPONENT SIDE SHOWN

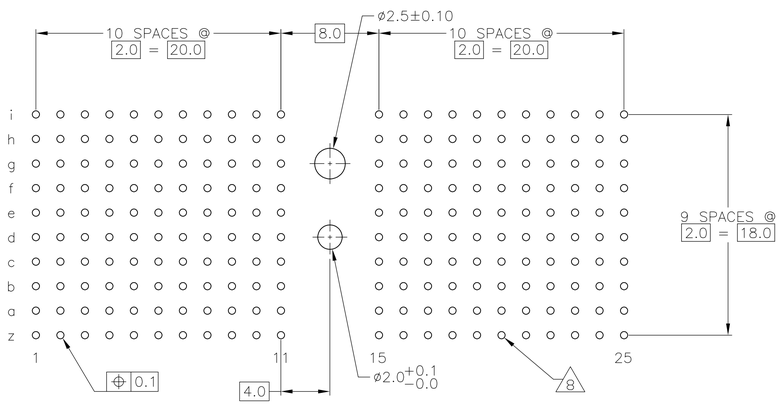

PLATED THRU HOLES PARAMETERS

REFERENCE APPLICATION SPECIFICATION

△15 OBSOLETE

FINISH	PART NUMBER
△2 △3 16	3-646356-0
△2 6 14	1-646356-9
△2 5 14	~~646356-9~~
△2 4	646356-4
△2 3	646356-1

THIS DRAWING IS A CONTROLLED DOCUMENT.

DIMENSIONS: mm

TOLERANCES UNLESS OTHERWISE SPECIFIED:
0 PLC ± —
1 PLC ± 0.1
2 PLC ± —
3 PLC ± —
4 PLC ± —
ANGLES ± 1°
±0.2

MATERIAL △1

FINISH SEE TABLE

DWN	S.WAITMAN	13JUL05
CHK	G.SKIPPER	13JUL05
APVD	G.SKIPPER	13JUL05
PRODUCT SPEC	108-1622	
APPLICATION SPEC	114-19029	
WEIGHT	—	

TE Connectivity

NAME: MALE ASSEMBLY, Z-PACK 2mm HM, TYPE D

SIZE	CAGE CODE	DRAWING NO	RESTRICTED TO
A1	00779	C-646356	—

CUSTOMER DRAWING | SCALE 4:1 | SHEET 1 OF 2 | REV H1

THIS DRAWING IS UNPUBLISHED. RELEASED FOR PUBLICATION -.-.
© COPYRIGHT - By - ALL RIGHTS RESERVED.

LOC	DIST
AD	00

REVISIONS

P	LTR	DESCRIPTION	DATE	DWN	APVD
	–	SEE SHEET 1	–	—	—

1. MATERIAL:
   CONTACT: PHOSPHOR BRONZE.
   HOUSING: GLASS-FILLED POLYESTER.

2. GENERAL PLATING SPECIFICATION: UNDERPLATING
(ENTIRE CONTACT): 1.27µm MIN NICKEL AND ACTION
PIN: 0.5µm MIN TIN\LEAD.
FOR PLATING OF MATING SURFACES SEE APPLICABLE
SPECIFICATION REFERENCE FOR EACH DASH NUMBER.

3. CONFORMS TO ALL TESTING ACCORDING TO IEC 61076-4-101
PERFORMANCE LEVEL 2.

4. CONFORMS TO ALL TESTING ACCORDING TO IEC 61076-4-101
PERFORMANCE LEVEL 1.

5. CONNECTOR TESTED AND QUALIFIED AGAINST TELCORDIA GR-1217-CORE QUALITY LEVEL 3,
CENTRAL OFFICE APPLICATIONS.

6. CONNECTOR TESTED AND QUALIFIED AGAINST TELCORDIA GR-1217-CORE QUALITY LEVEL 3,
UNCONTROLLED ENVIROMENT APPLICATIONS.

7. CONNECTOR MARKED WITH PART NUMBER AND DATE CODE.
ADDITIONAL CHARACTERS OR MARKINGS, AS WELL AS THE LOCATION OF THE MARKINGS,
MAY BE ADDED FOR TRACEABILITY BASED UPON MANUFACTURERS DISCRETION.

8. PLATED-THROUGH HOLES AT 2x2mm SQUARE GRID
PATTERN DEFINED BY CONTACT LAYOUT.

9. FOR ACTUAL PIN LOADING SEE "CONTACT LAYOUT".

10. FOR ACTUAL PIN DIMENSIONS SEE "CONTACT DIMENSIONS".

11. TO BE MEASURED AT BOTTOM OF SHROUD.

12. POLARIZATION FEATURE.

13. AREA RESERVED FOR KEYING PART (BASIC P/N 100525).

14. CONNECTOR LUBRICATED WITH BELCORE APPROVED LUBRICANT,
TECHNICAL REFERENCE: TR-NWT-001217 ISSUE 1, SEP 1992.

15. OBSOLETE PARTS: OBSOLETE CIS STREAMLINING PER D.RENAUD/D.SINISI

16. 0.76µm MIN GOLD PLATING AT MATING SURFACES.

THIS DRAWING IS A CONTROLLED DOCUMENT.

DIMENSIONS: mm

TOLERANCES UNLESS OTHERWISE SPECIFIED:
0 PLC ± —
1 PLC ± 0.1
2 PLC ± —
3 PLC ± —
4 PLC ± —
ANGLES ± 1°
±0.2

MATERIAL: SEE SHEET 1
FINISH: SEE SHEET 1

DWN S.WAITMAN 13JUL05
CHK G.SKIPPER 13JUL05
APVD G.SKIPPER 13JUL05
PRODUCT SPEC 108-1622
APPLICATION SPEC 114-19029
WEIGHT –

TE Connectivity

NAME: MALE ASSEMBLY, Z-PACK 2mm HM, TYPE D

SIZE	CAGE CODE	DRAWING NO	RESTRICTED TO
A1	00779	C-646356	—

CUSTOMER DRAWING | SCALE 4:1 | SHEET 2 OF 2 | REV H1