THIS DRAWING IS UNPUBLISHED. RELEASED FOR PUBLICATION -,- .
© COPYRIGHT - BY TYCO ELECTRONICS CORPORATION. ALL RIGHTS RESERVED.

LOC	DIST
AD	00

REVISIONS

P	LTR	DESCRIPTION	DATE	DWN	APVD
	A	REV PER EC 0512-0302-05	15DEC05	BC	GS
	B	ECR-10-018652	10SEP10	SW	MQW

CONNECTOR ASSEMLBY EXAMPLARY LOADED △9

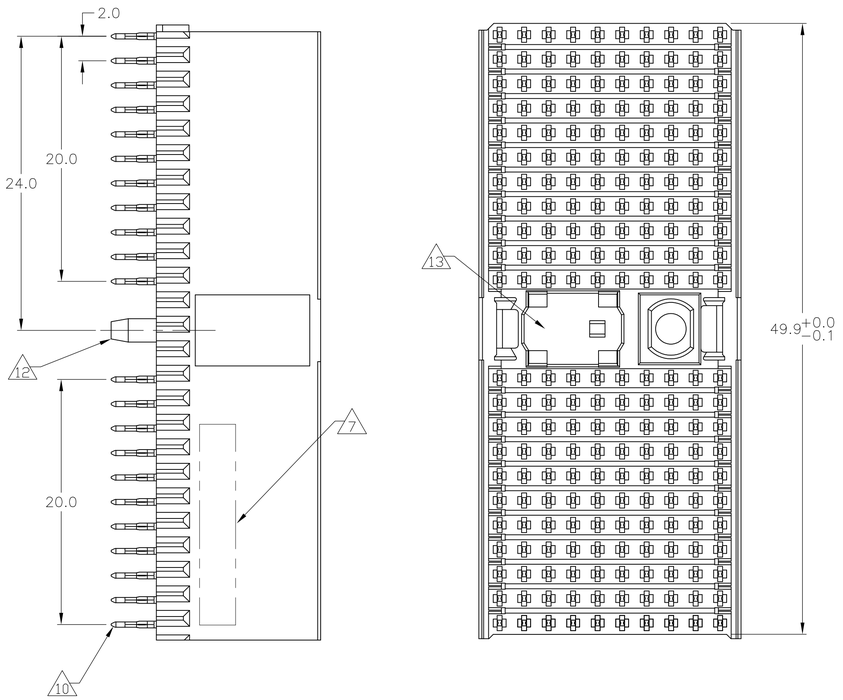

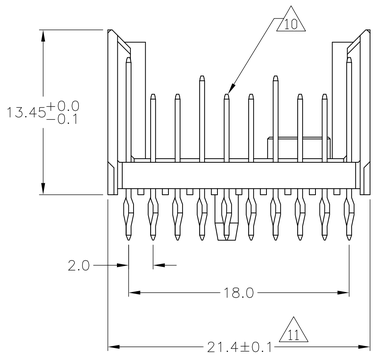

CONTACT DIMENSIONS

SCALE 5:1

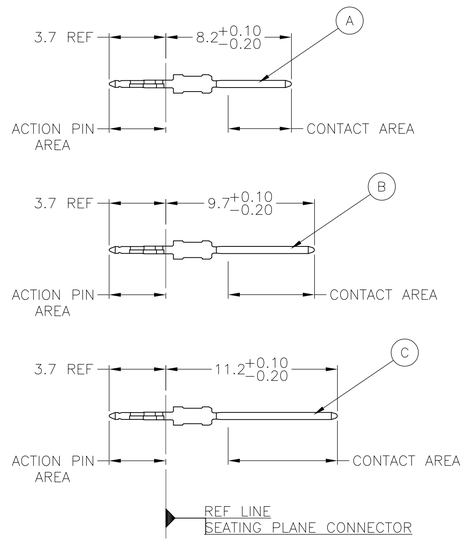

CONTACT LAYOUT

	z	a	b	c	d	e	f	g	h	i
1	C	A	A	B	A	A	B	A	A	C
2	C	A	A	B	A	A	B	A	A	C
3	C	A	A	B	A	A	B	A	A	C
4	C	A	A	B	A	A	B	A	A	C
5	C	A	A	B	A	A	B	A	A	C
6	C	A	A	B	A	A	B	A	A	C
7	C	A	A	B	A	A	B	A	A	C
8	C	A	A	B	A	A	B	A	A	C
9	C	A	A	B	A	A	B	A	A	C
10	C	A	A	B	A	A	B	A	A	C
11	C	A	A	B	A	A	B	A	A	C
	MULTI PURPOSE CENTER									
15	C	A	A	B	A	A	B	A	A	C
16	C	A	A	B	A	A	B	A	A	C
17	C	A	A	B	A	A	B	A	A	C
18	C	A	A	B	A	A	B	A	A	C
19	C	A	A	B	A	A	B	A	A	C
20	C	A	A	B	A	A	B	A	A	C
21	C	A	A	B	A	A	B	A	A	C
22	C	A	A	B	A	A	B	A	A	C
23	C	A	A	B	A	A	B	A	A	C
24	C	A	A	B	A	A	B	A	A	C
25	C	A	A	B	A	A	B	A	A	C

RECOMMENDED PCB-HOLE LAYOUT
COMPONENT SIDE SHOWN

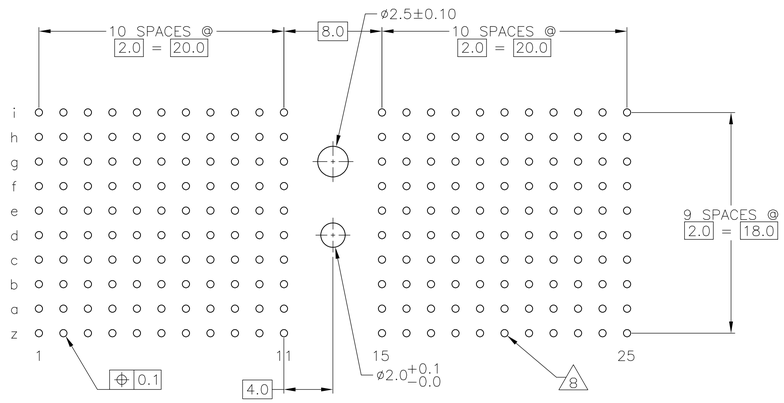

PLATED THRU HOLES PARAMETERS

REFERENCE APPLICATION SPECIFICATION

FINISH	PART NUMBER
△2 △6 △14	1-5646764-9
△2 △5 △14	5646764-9
△2 △4	5646764-4
△2 △3	5646764-1

THIS DRAWING IS A CONTROLLED DOCUMENT.

DIMENSIONS: mm

TOLERANCES UNLESS OTHERWISE SPECIFIED:
0 PLC ± —
1 PLC ± 0.1
2 PLC ± —
3 PLC ± —
4 PLC ± —
ANGLES ± 1°
±0.2

MATERIAL △1

FINISH SEE TABLE

DWN	S.WAITMAN	9AUG05
CHK	G.SKIPPER	9AUG05
APVD	G.SKIPPER	9AUG05
PRODUCT SPEC	108-1622	
APPLICATION SPEC	114-19029	
WEIGHT	—	

Tyco Electronics Corporation
Harrisburg, Pa 17105-3608

NAME: MALE ASSEMBLY, Z-PACK 2mm HM, TYPE D

SIZE	CAGE CODE	DRAWING NO	RESTRICTED TO
A1	00779	C-5646764	—

CUSTOMER DRAWING | SCALE 4:1 | SHEET 1 OF 2 | REV B

THIS DRAWING IS UNPUBLISHED. RELEASED FOR PUBLICATION -,- .
© COPYRIGHT - BY TYCO ELECTRONICS CORPORATION. ALL RIGHTS RESERVED.

LOC	DIST
AD	00

REVISIONS

P	LTR	DESCRIPTION	DATE	DWN	APVD
	—	SEE SHEET 1	–	—	—

1. MATERIAL:
   CONTACT: PHOSPHOR BRONZE.
   HOUSING: GLASS-FILLED POLYESTER.

2. GENERAL PLATING SPECIFICATION: UNDERPLATING
(ENTIRE CONTACT): 1.27µm MIN NICKEL AND ACTION
PIN: 0.5µm MIN TIN.
FOR PLATING OF MATING SURFACES SEE APPLICABLE
SPECIFICATION REFERENCE FOR EACH DASH NUMBER.

3. CONFORMS TO ALL TESTING ACCORDING TO IEC 61076-4-101
PERFORMANCE LEVEL 2.

4. CONFORMS TO ALL TESTING ACCORDING TO IEC 61076-4-101
PERFORMANCE LEVEL 1.

5. CONNECTOR TESTED AND QUALIFIED AGAINST TELCORDIA GR-1217-CORE QUALITY LEVEL 3,
CENTRAL OFFICE APPLICATIONS.

6. CONNECTOR TESTED AND QUALIFIED AGAINST TELCORDIA GR-1217-CORE QUALITY LEVEL 3,
UNCONTROLLED ENVIROMENT APPLICATIONS.

7. CONNECTOR MARKED WITH PART NUMBER AND DATE CODE.
ADDITIONAL CHARACTERS OR MARKINGS, AS WELL AS THE LOCATION OF THE MARKINGS,
MAY BE ADDED FOR TRACEABILITY BASED UPON MANUFACTURERS DISCRETION.

8. PLATED-THROUGH HOLES AT 2x2mm SQUARE GRID
PATTERN DEFINED BY CONTACT LAYOUT.

9. FOR ACTUAL PIN LOADING SEE "CONTACT LAYOUT".

10. FOR ACTUAL PIN DIMENSIONS SEE "CONTACT DIMENSIONS".

11. TO BE MEASURED AT BOTTOM OF SHROUD.

12. POLARIZATION FEATURE.

13. AREA RESERVED FOR KEYING PART (BASIC P/N 100525).

14. CONNECTOR LUBRICATED WITH BELCORE APPROVED LUBRICANT,
TECHNICAL REFERENCE: TR-NWT-001217 ISSUE 1, SEP 1992.

THIS DRAWING IS A CONTROLLED DOCUMENT.

DIMENSIONS: mm

TOLERANCES UNLESS OTHERWISE SPECIFIED:
0 PLC ± —
1 PLC ± 0.1
2 PLC ± —
3 PLC ± —
4 PLC ± —
ANGLES ± 1°
±0.2

MATERIAL: SEE SHEET 1
FINISH: SEE SHEET 1

DWN S.WAITMAN 9AUG05
CHK G.SKIPPER 9AUG05
APVD G.SKIPPER 9AUG05
PRODUCT SPEC 108-1622
APPLICATION SPEC 114-19029
WEIGHT —

Tyco Electronics Corporation
Harrisburg, Pa 17105-3608

NAME MALE ASSEMBLY, Z-PACK 2mm HM, TYPE D

SIZE A1 | CAGE CODE 00779 | DRAWING NO C-5646764 | RESTRICTED TO —

CUSTOMER DRAWING | SCALE 4:1 | SHEET 2 OF 2 | REV B