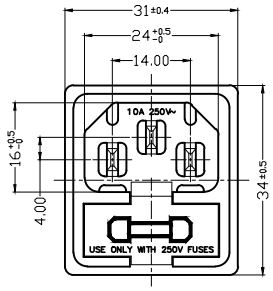

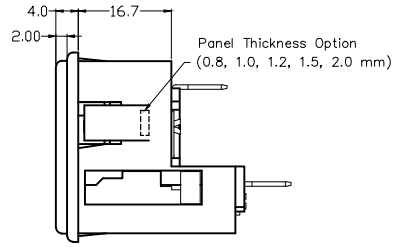

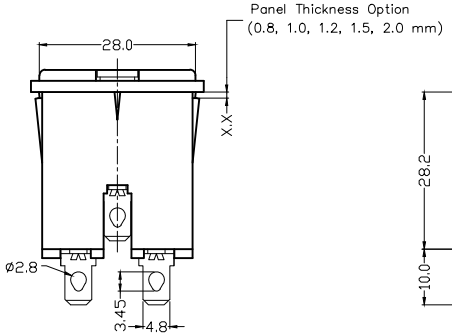

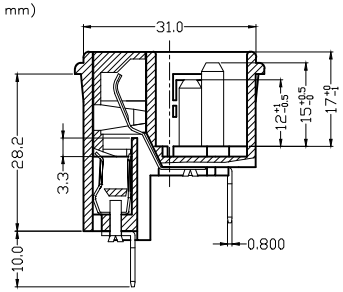

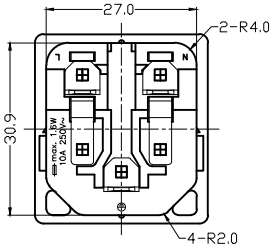

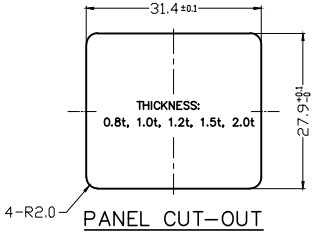

PANEL CUT-OUT

SPECIFICATION

A: MATERIAL:
1. HOUSING: NYLON 66 FLAMMABILITY, UL 94V-0
2. TERMINAL: COPPER ALLOY, TIN PLATED

B: CHARACTERISTICS:
1. RATING: 10A 250V~ NORTH AMERICA & EUROPE
2. INSULATION RESISTANCE: 100 MΩ MIN, AT 500 VDC
3. ELECTRIC STRENGHT: AC 2,000 V FOR 1 MINUTE

C: APPROVALS:

D: ORDERING INFORMATION:

P/N	PANEL THICKNESS
42R35A-3122-080	0.8 mm
42R35A-3122-100	1.0 mm
42R35A-3122-120	1.2 mm
42R35A-3122-150	1.5 mm
42R35A-3122-200	2.0 mm
42R35A-3122-300	3.0 mm

RoHS COMPLIANT

REVISIONS

REV	DATE	CHANGE	CHNG	CHCK	APPR

TOLERANCE
UNLESS OTHERWISE SPECIFIED
X ± 1
X.X ± 0.4
X.XX ± 0.20

Power Dynamics, Inc.
Phone: 973 560-0019 Whippany, New Jersey Fax: 973 560-0076

PART: IEC 60320 C14 APPLIANCE INLET; 2 FUSE SNAP IN PANEL MOUNT; 4.8mm QC TERMINALS

DRAWN BY PB	DATE: 9/15/21	PART #: 42R35A-3122-XXX	SHEET 1 of 1
CHECK BY -	DATE: -	SIZE: A / ALL DIMENSIONS FOR REFERENCE ONLY	-
APPR BY	DATE:	SCALE: NTS / REF MODEL: 0717-2	REV: