# PS0S0DM3E ✔ ACTIVE

Corcom | Corcom P

TE Internal #: 4-1609153-6

Multi-Function Inlet Filters, Power Entry Module, Single AC Input, DPST, Complete Can, Vertical, 3 A, Snap-In, IEC Input, Corcom P

View on TE.com >

EMI & EMC Solutions > EMI Filters > Multi-Function Inlet Filters > Power Entry Module: Medium Multi-Function, Corcom P Series

Filter Type: **Power Entry Module**

Input Voltage Selection: **Single AC**

Filter Switch Type: **DPST**

Filter Shield Type: **Complete Can**

Mount Angle: **Vertical**

All Power Entry Module: Medium Multi-Function, Corcom P Series (36)

## Features

### Product Type Features

| | |
|---|---|
| Ground Choke Option | No |
| Ground Option | None |
| Filter Type | Power Entry Module |
| Filter Switch Type | DPST |
| Input Termination Type | IEC |
| Output Termination Type | .187" FASTON |
| Filtering Requirements | Filtered |
| Filter Connector Type | IEC 60320-1 C-14 |

### Configuration Features

| | |
|---|---|
| Fuse Options | Dual |

### Electrical Characteristics

| | |
|---|---|
| Input Voltage Selection | Single AC |
| Leakage Current (Max) (120VAC, 60Hz) | 250 µA |

| | |
|---|---|
| Leakage Current (Max) (250VAC, 50Hz) | 500 µA |
| Filter Current Rating | 3 A |
| Voltage Rating (Max) | 250 VAC |

### Body Features

| | |
|---|---|
| Filter Shield Type | Complete Can |

### Mechanical Attachment

| | |
|---|---|
| Mount Angle | Vertical |
| Filter Mount Style | Snap-In |

### Dimensions

| | |
|---|---|
| Panel Thickness Range | .79 – 2 mm |

### Usage Conditions

| | |
|---|---|
| Operating Temperature Range | -10 – 40 °C |

### Operation/Application

| | |
|---|---|
| For Use With | P Series |

## Product Compliance

For compliance documentation, visit the product page on TE.com>

| | |
|---|---|
| EU RoHS Directive 2011/65/EU | Compliant |
| EU ELV Directive 2000/53/EC | Compliant |
| China RoHS 2 Directive MIIT Order No 32, 2016 | No Restricted Materials Above Threshold |
| EU REACH Regulation (EC) No. 1907/2006 | Current ECHA Candidate List: JUNE 2023 (235)<br>Candidate List Declared Against: JUNE 2022 (224)<br>Does not contain REACH SVHC |
| Halogen Content | Low Halogen - Br, Cl, F, I < 900 ppm per homogenous material. Also BFR/CFR/PVC Free |
| Solder Process Capability | Not applicable for solder process capability |

Product Compliance Disclaimer

This information is provided based on reasonable inquiry of our suppliers and represents our current actual knowledge based on the information they provided. This information is subject to change. The part numbers that TE has identified as EU RoHS compliant have a maximum concentration of 0.1% by weight in homogenous materials for lead, hexavalent chromium, mercury, PBB, PBDE, DBP, BBP, DEHP, DIBP, and 0.01% for cadmium, or qualify for an exemption to these limits as defined in the Annexes of Directive 2011/65/EU (RoHS2). Finished electrical and electronic equipment products will be CE marked as required by Directive 2011/65/EU. Components may not be CE marked. Additionally, the part numbers that TE has identified as EU ELV compliant have a maximum concentration of 0.1% by weight in homogenous materials for lead, hexavalent chromium, and mercury, and 0.01% for cadmium, or qualify for an exemption to these limits

as defined in the Annexes of Directive 2000/53/EC (ELV). Regarding the REACH Regulation, the information TE provides on SVHC in articles for this part number is based on the latest European Chemicals Agency (ECHA) 'Guidance on requirements for substances in articles' posted at this URL: https://echa.europa.eu/guidance-documents/guidance-on-reach

## Compatible Parts

TE Part # 1609140-1
PA100=F6800

TE Part # 1609146-1
PA101 CONNECTOR PLU=F6998

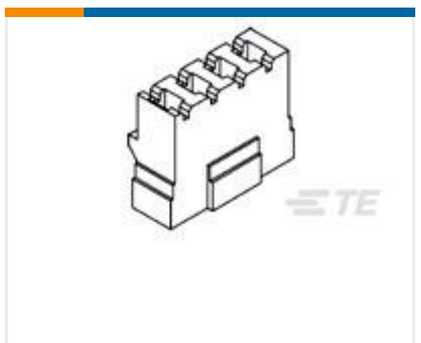

TE Part # 1609146-2
PA102 CONNECTOR PIN=F6999

TE Part # 1609140-3
PA105 J0=F6806

## Also in the Series | Corcom P

EMI & EMC Accessories(4)

Multi-Function Inlet Filters(368)

## Customers Also Bought

TE Part #6-6609107-4
CORCOM P SERIES MULTI-FUNCTION INLET FIL

TE Part #1-499252-2
030 STRAIN RELIEF A-L RCPT

TE Part #5745394-2
HD-20 RCPT 9P RA 318 THD INS

TE Part #1658623-1
10 NOVO MIL 30DP, LEAD FREE

TE Part #1658623-3
16 NOVO MIL 30DP, LEAD FREE

TE Part #1658623-7
30 NOVO MIL 30DP, LEAD FREE

TE Part #4-1437624-6
PKES120B1/4=KNOB PLSTC FLUTED

TE Part #2-323916-1
TERMINAL,PIDG R 26-22 8

## Documents

## Product Drawings

PS0S0DM3E-C7092

English

## CAD Files

### Customer View Model

ENG_CVM_CVM_4-1609153-6_A.2d_dxf.zip

English

3D PDF

3D

### Customer View Model

ENG_CVM_CVM_4-1609153-6_A.3d_igs.zip

English

### Customer View Model

ENG_CVM_CVM_4-1609153-6_A.3d_stp.zip

English

By downloading the CAD file I accept and agree to the Terms and Conditions of use.

## Datasheets & Catalog Pages

1654001_CORCOM_PRODUCT_GUIDE

English

Corcom Combined Selector Charts

English

5-1773464-0_CORCOM_MEDIUM_P_SERIES_FILTERS

English