PSJS0DH30 ✔ ACTIVE

Corcom | Corcom P

TE Internal #: 3-6609106-6

Multi-Function Inlet Filters, Power Entry Module, Single AC Input, DPST, None, Vertical, 3 A, Snap-In, IEC Input, .187" FASTON Output, Corcom P

View on TE.com >

EMI & EMC Solutions > EMI Filters > Multi-Function Inlet Filters > CORCOM P SERIES MULTI-FUNCTION INLET FIL

Filter Type: **Power Entry Module**

Input Voltage Selection: **Single AC**

Filter Switch Type: **DPST**

Filter Shield Type: **None**

Mount Angle: **Vertical**

All CORCOM P SERIES MULTI-FUNCTION INLET FIL (300)

Features

Product Type Features

Ground Choke Option	No
Ground Option	None
Filter Type	Power Entry Module
Filter Switch Type	DPST
Input Termination Type	IEC
Output Termination Type	.187" FASTON
Filtering Requirements	Filtered
Filter Connector Type	IEC 320/C-14

Configuration Features

Extender Options	J Series
Fuse Options	Dual

Electrical Characteristics

Input Voltage Selection	Single AC
Leakage Current (Max) (120VAC, 60Hz)	2 µA
Leakage Current (Max) (250VAC, 50Hz)	5 µA
Filter Current Rating	3 A
Voltage Rating (Max)	250 VAC

Body Features

Filter Shield Type	None

Mechanical Attachment

Mount Angle	Vertical
Filter Mount Style	Snap-In

Usage Conditions

Operating Temperature Range	-10 – 40 °C

Other

Comment	Extenders allow the P Series to fit other TE /competitor panel cutouts.

Product Compliance

For compliance documentation, visit the product page on TE.com>

EU RoHS Directive 2011/65/EU	Compliant
EU ELV Directive 2000/53/EC	Compliant
China RoHS 2 Directive MIIT Order No 32, 2016	No Restricted Materials Above Threshold
EU REACH Regulation (EC) No. 1907/2006	Current ECHA Candidate List: JUNE 2023 (235) Candidate List Declared Against: JAN 2023 (233) Does not contain REACH SVHC
Halogen Content	Not Low Halogen - contains Br or Cl > 900 ppm.
Solder Process Capability	Not applicable for solder process capability

Product Compliance Disclaimer

This information is provided based on reasonable inquiry of our suppliers and represents our current actual knowledge based on the information they provided. This information is subject to change. The part numbers that TE has identified as EU RoHS compliant have a maximum concentration of 0.1% by weight in homogenous materials for lead, hexavalent chromium, mercury, PBB, PBDE, DBP, BBP, DEHP, DIBP, and 0.01% for cadmium, or qualify for an exemption to these limits as defined in the Annexes of Directive 2011/65/EU (RoHS2). Finished electrical and electronic equipment products will be CE marked as required by Directive 2011/65/EU. Components may not be CE marked. Additionally, the part numbers that TE has identified as EU ELV compliant have a maximum concentration of 0.1% by weight in homogenous materials for lead, hexavalent chromium, and mercury, and 0.01% for cadmium, or qualify for an exemption to these limits

as defined in the Annexes of Directive 2000/53/EC (ELV). Regarding the REACH Regulation, the information TE provides on SVHC in articles for this part number is based on the latest European Chemicals Agency (ECHA) 'Guidance on requirements for substances in articles' posted at this URL: https://echa.europa.eu/guidance-documents/guidance-on-reach

Compatible Parts

TE Part # 1609140-1
PA100=F6800

TE Part # 1609146-1
PA101 CONNECTOR PLU=F6998

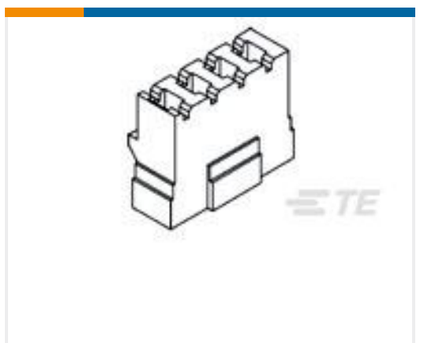

TE Part # 1609146-2
PA102 CONNECTOR PIN=F6999

TE Part # 1609140-3
PA105 J0=F6806

Also in the Series | Corcom P

EMI & EMC Accessories(4)

Multi-Function Inlet Filters(368)

Customers Also Bought

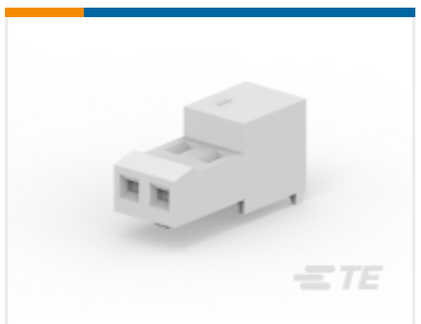

TE Part #4-640440-0
MTA Receptacle: Nylon, Tin Plated, 2.54 mm

TE Part #3-640426-3
03P MTA156 CONN ASSY 18AWG ORA

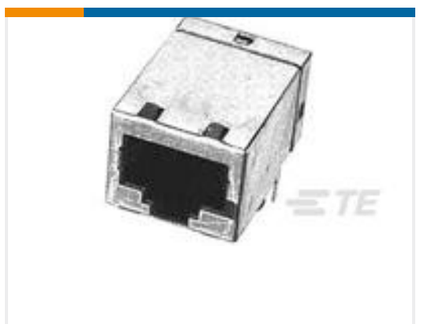

TE Part #5557786-1
MJ,8POS,R/A,SHLD,PCB GD

TE Part #1546306-2
2P .374" DR BARRIER STRIP

TE Part #640919-1
RECEPT,PIDG FASTON 16-14 187

TE Part #2-328657-1
N PIDG RING 22-16 2

Documents

Product Drawings

PSJS0DH30=C1193

English

CAD Files

Customer View Model

ENG_CVM_3-6609106-6_A.3d_igs.zip

English

Customer View Model

ENG_CVM_3-6609106-6_A.3d_stp.zip

English

Customer View Model

ENG_CVM_3-6609106-6_A.2d_dxf.zip

English

3D PDF

3D

Customer View Model

ENG_CVM_CVM_3-6609106-6_O.3d_igs.zip

English

Customer View Model

ENG_CVM_CVM_3-6609106-6_O.3d_stp.zip

English

Customer View Model

ENG_CVM_CVM_3-6609106-6_O.2d_dxf.zip

English

3D PDF

3D

By downloading the CAD file I accept and agree to the Terms and Conditions of use.

Datasheets & Catalog Pages

1654001_CORCOM_PRODUCT_GUIDE

English

Corcom Combined Selector Charts

English

1-1654250-1_CORCOM_EMI_RFI_QRG

English