# PS0SSSS6A ✔ ACTIVE

Corcom | Corcom P

TE Internal #: 3-6609107-1

Multi-Function Inlet Filters, Power Entry Module, Dual AC (SMPS) Input, DPST, Filter Shield, Vertical, 6 A, Snap-In, IEC Input, Corcom P

View on TE.com >

EMI & EMC Solutions > EMI Filters > Multi-Function Inlet Filters > CORCOM P SERIES MULTI-FUNCTION INLET FIL

Filter Type: **Power Entry Module**

Input Voltage Selection: **Dual AC (SMPS)**

Filter Switch Type: **DPST**

Filter Shield Type: **Filter Shield**

Mount Angle: **Vertical**

All CORCOM P SERIES MULTI-FUNCTION INLET FIL (300)

## Features

### Product Type Features

| | |
|---|---|
| Ground Choke Option | No |
| Ground Option | None |
| Filter Type | Power Entry Module |
| Filter Switch Type | DPST |
| Input Termination Type | IEC |
| Output Termination Type | .187" FASTON |
| Filtering Requirements | Filtered |
| Filter Connector Type | IEC 320/C-14 |

### Configuration Features

| | |
|---|---|
| Extender Options | None |
| Fuse Options | Single |

### Electrical Characteristics

| | |
|---|---|
| Input Voltage Selection | Dual AC (SMPS) |
| Leakage Current (Max) (120VAC, 60Hz) | 250 µA |
| Leakage Current (Max) (250VAC, 50Hz) | 500 µA |
| Filter Current Rating | 6 A |
| Voltage Rating (Max) | 250 VAC |

### Body Features

| | |
|---|---|
| Filter Shield Type | Filter Shield |

### Mechanical Attachment

| | |
|---|---|
| Mount Angle | Vertical |
| Filter Mount Style | Snap-In |

### Usage Conditions

| | |
|---|---|
| Operating Temperature Range | -10 – 40 °C |

## Product Compliance

For compliance documentation, visit the product page on TE.com>

| | |
|---|---|
| EU RoHS Directive 2011/65/EU | Compliant |
| EU ELV Directive 2000/53/EC | Compliant |
| China RoHS 2 Directive MIIT Order No 32, 2016 | No Restricted Materials Above Threshold |
| EU REACH Regulation (EC) No. 1907/2006 | Current ECHA Candidate List: JUNE 2023 (235)<br>Candidate List Declared Against: JAN 2023 (233)<br>Does not contain REACH SVHC |
| Halogen Content | Not Low Halogen - contains Br or Cl > 900 ppm. |
| Solder Process Capability | Not applicable for solder process capability |

Product Compliance Disclaimer

This information is provided based on reasonable inquiry of our suppliers and represents our current actual knowledge based on the information they provided. This information is subject to change. The part numbers that TE has identified as EU RoHS compliant have a maximum concentration of 0.1% by weight in homogenous materials for lead, hexavalent chromium, mercury, PBB, PBDE, DBP, BBP, DEHP, DIBP, and 0.01% for cadmium, or qualify for an exemption to these limits as defined in the Annexes of Directive 2011/65/EU (RoHS2). Finished electrical and electronic equipment products will be CE marked as required by Directive 2011/65/EU. Components may not be CE marked. Additionally, the part numbers that TE has identified as EU ELV compliant have a maximum concentration of 0.1% by weight in homogenous materials for lead, hexavalent chromium, and mercury, and 0.01% for cadmium, or qualify for an exemption to these limits as defined in the Annexes of Directive 2000/53/EC (ELV). Regarding the REACH Regulation, the information TE provides on SVHC in articles for this part number is based on the latest European Chemicals Agency (ECHA) 'Guidance on requirements for substances in articles' posted at this URL: https://echa.europa.eu/guidance-documents/guidance-on-reach

## Compatible Parts

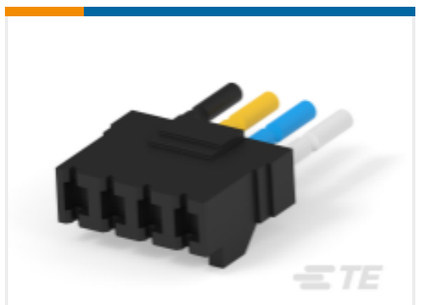

TE Part # 1609140-1
PA100=F6800

TE Part # 1609146-1
PA101 CONNECTOR PLU=F6998

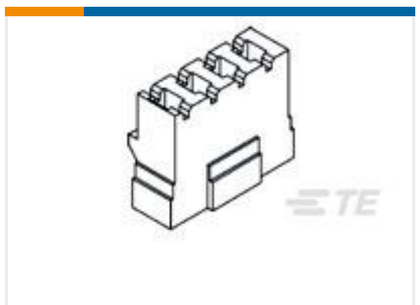

TE Part # 1609146-2
PA102 CONNECTOR PIN=F6999

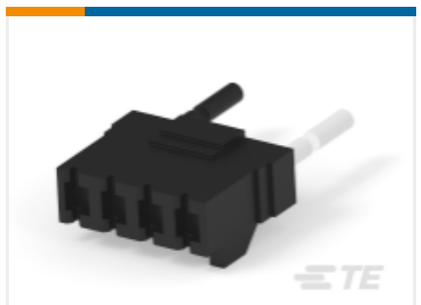

TE Part # 1609140-3
PA105 J0=F6806

## Also in the Series | Corcom P

EMI & EMC Accessories(4)

Multi-Function Inlet Filters(368)

## Customers Also Bought

TE Part #2-644488-2
02P MTA100 SHRD HDR F/L R/A SN

TE Part #1-292303-1
Std USB Type A, R/A, SMT

TE Part #1-794058-0
MINI UMNL SOK L/P LF

TE Part #1969814-1
06P UMNL PIN HDR ASSY, PIN V0 GW

TE Part #31091
BODY R 22-16 COMM 22-18 MIL 6

TE Part #2-2213767-5
AV19 SPL 5A MOVE RING LED RED 12V

TE Part #FX1901-0001-0200-L
200 LBF COMPRESSION LOAD CELL 100MV

TE Part #2330274-2
SSRDC-200D25 = Hokey Puck,25A, 200V DC

TE Part #1586892-1
03P UMNL HDR ASSY R/A, GW

TE Part #2-1977223-6
FSM8JSMAASTR=6MM TACT SWITCH, SMT 260gf,

## Documents

### Product Drawings

PS0SSSS6A=C1075

English

### CAD Files

Customer View Model

ENG_CVM_3-6609107-1_A.3d_igs.zip

English

Customer View Model

ENG_CVM_3-6609107-1_A.3d_stp.zip

English

Customer View Model

ENG_CVM_3-6609107-1_A.2d_dxf.zip

English

3D PDF

3D

Customer View Model

ENG_CVM_CVM_3-6609107-1_O.3d_igs.zip

English

Customer View Model

ENG_CVM_CVM_3-6609107-1_O.3d_stp.zip

English

Customer View Model

ENG_CVM_CVM_3-6609107-1_O.2d_dxf.zip

English

3D PDF

3D

By downloading the CAD file I accept and agree to the Terms and Conditions of use.

### Datasheets & Catalog Pages

1654001_CORCOM_PRODUCT_GUIDE

English

Corcom Combined Selector Charts

English

1-1654250-1_CORCOM_EMI_RFI_QRG

English