EV-T2M3SE12-3AC32A-0,7M6,0E00 - Infrastructure charging socket

1621729

https://www.phoenixcontact.com/us/products/1621729

Please be informed that the data shown in this PDF document is generated from our Online Catalog. Please find the complete data in the user documentation. Our General Terms of Use for Downloads are valid.

CHARX connect, Infrastructure charging socket, for charging electric vehicles (EV) with alternating current (AC), Type 2, IEC 62196-2, 32 A / 480 V (AC), length: 0.7 m, locking actuator: 12 V, 4-pos., Front and rear mounting, PHOENIX CONTACT logo

Product Description

Infrastructure charging socket for charging electric vehicles (EV) with alternating current (AC), compatible with type 2 Infrastructure Plugs, for installation at charging stations for E-Mobility (EVSE)

Your advantages

- Complete product range
- Uniform, space-saving installation space
- Available with your logo on request – for consistent branding of your charging station
- Integrated interlock during charging
- Manual emergency release of the locking actuator
- Developed and produced in accordance with the IATF 16949 automotive standard and ISO 9001

Commercial Data

Item number	1621729
Packing unit	1 pc
Minimum order quantity	1 pc
Note	Made to Order (non-returnable)
Sales Key	EM01
Product Key	XWBADC
GTIN	4046356961523
Weight per Piece (including packing)	660 g
Weight per Piece (excluding packing)	0.58 g
Customs tariff number	85444290
Country of origin	DE

Technical Data

Product properties

Product type	Infrastructure charging socket
Product family	CHARX connect
Application	for charging electric vehicles (EV) with alternating current (AC)
	compatible with infrastructure charging plugs
Affixed logo	PHOENIX CONTACT logo
Charging standard	Type 2
Charging mode	Mode 3, Case B

Electrical properties

Type of signal transmission	Pulse width modulation
Note on the connection method	Crimp connection, cannot be disconnected
Type of charging current	AC 3-phase
Charging power	26.6 kW
Charging current	32 A

Power contact

Number	5 (L1, L2, L3, N, PE)
Rated voltage	480 V AC
Rated current	32 A

Signal contact

Number	2 (CP, PP)
Rated voltage	30 V AC
Rated current	2 A

Locking actuator

Operating voltage	12 V
Note number of positions	4-pos.
Position of the locking actuator	top center

Locking actuator

Operating voltage	12 V
Note number of positions	4-pos.
Position of the locking actuator	top center
Possible power supply range at the motor	9 V ... 16 V
Maximum voltage for locking detection	30 V
Typical motor current for locking	0.2 A
Reverse current of the motor	max. 1 A
Max. dwell time with reverse current	1000 ms
Recommended adaptation time	600 ms
Pause time after entry or exit path	3 s

Service life insertion cycles	> 10000 load cycles
Lock recognition	available
Mechanical emergency release	available
Ambient temperature (operation)	-30 °C ... 50 °C
Cable length	0.5 m
Cable structure	4 x 0.5 mm²

Cable/line

Cable length	0.7 m (AC cables)
	0.5 m (Locking actuator cables)
Cable structure	5x 6.0 mm² + 2x 0.5 mm²

Mechanical properties

Mechanical data

Insertion/withdrawal cycles	> 10000
Insertion force	< 100 N
Withdrawal force	< 100 N

Environmental and real-life conditions

Ambient conditions

Ambient temperature (operation)	-30 °C ... 50 °C
Ambient temperature (storage/transport)	-40 °C ... 80 °C
Altitude	5000 m (above sea level)

Standards and regulations

Standards

Standards/regulations	IEC 62196-2

Mounting

Mounting type Infrastructure charging socket	Front and rear mounting (0 to 90 degree frontal inclination possible)
Mounting type Protective cover	front (available separately)
Max. wall thickness	max. 50 mm (Rear panel mounting, normative maximum specification for infrastructure plug)
	max. 28 mm (Rear mounting, normative maximum specification for infrastructure plug when using protective cover 1405217)
	max. 10 mm (Front mounting, when using the locking mechanism)
Mounting hole diameter	7.00 mm (ø)

Drawings

Diagram

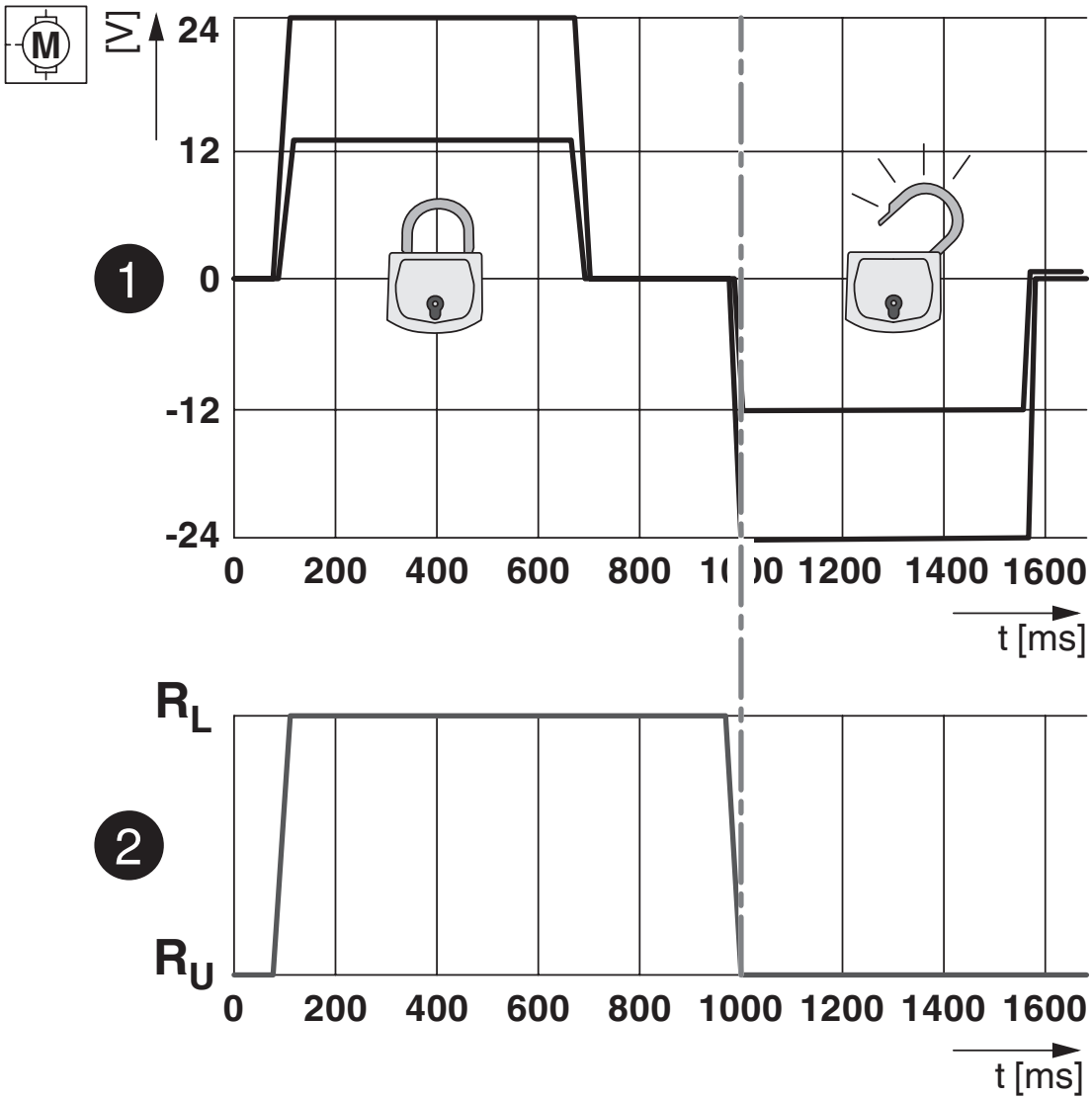

Locking states of the locking actuator

Dimensional drawing

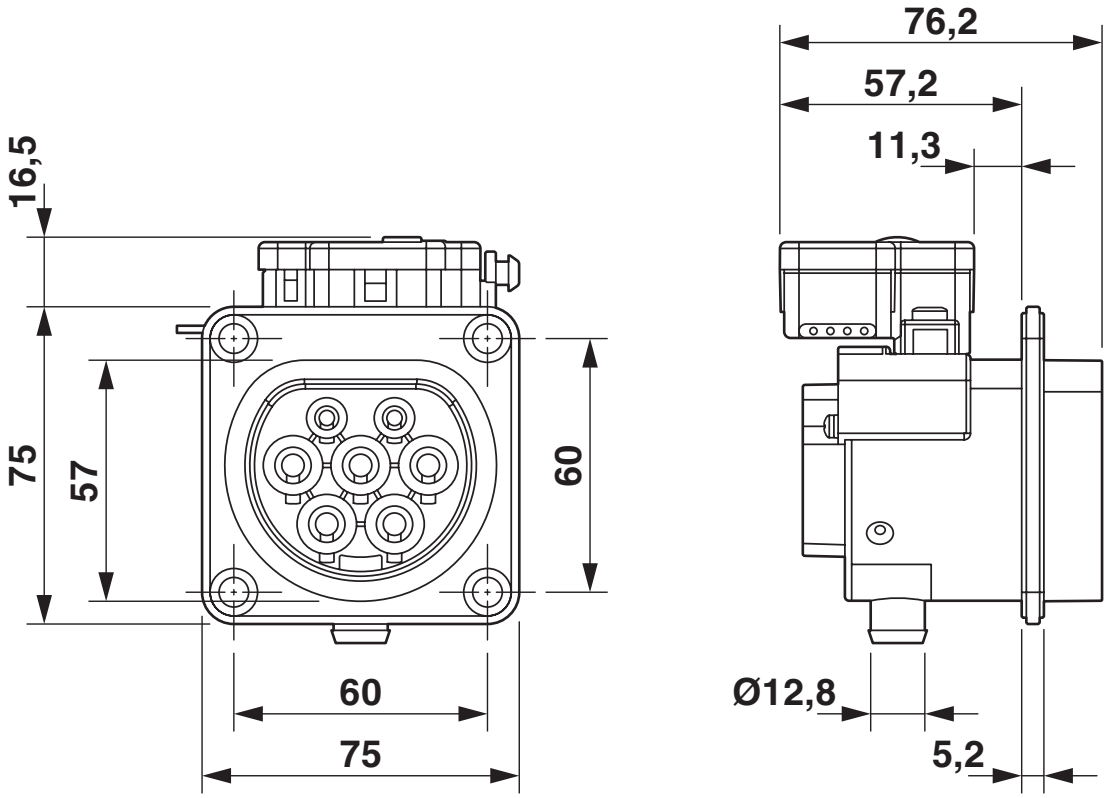

Dimensional drawing

Block diagram

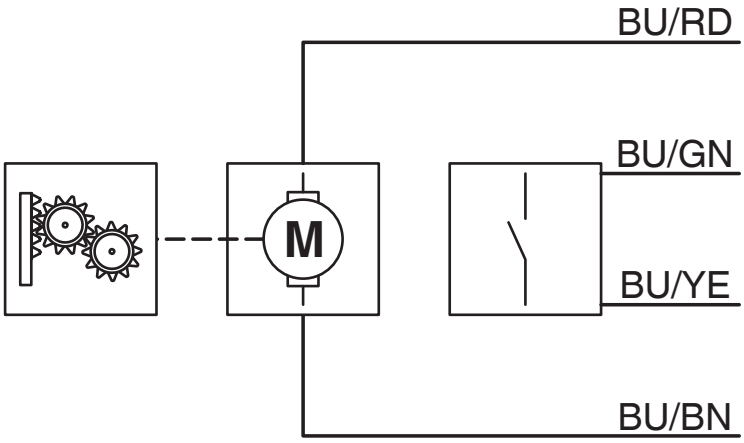

Block diagram of the locking actuator

Schematic diagram

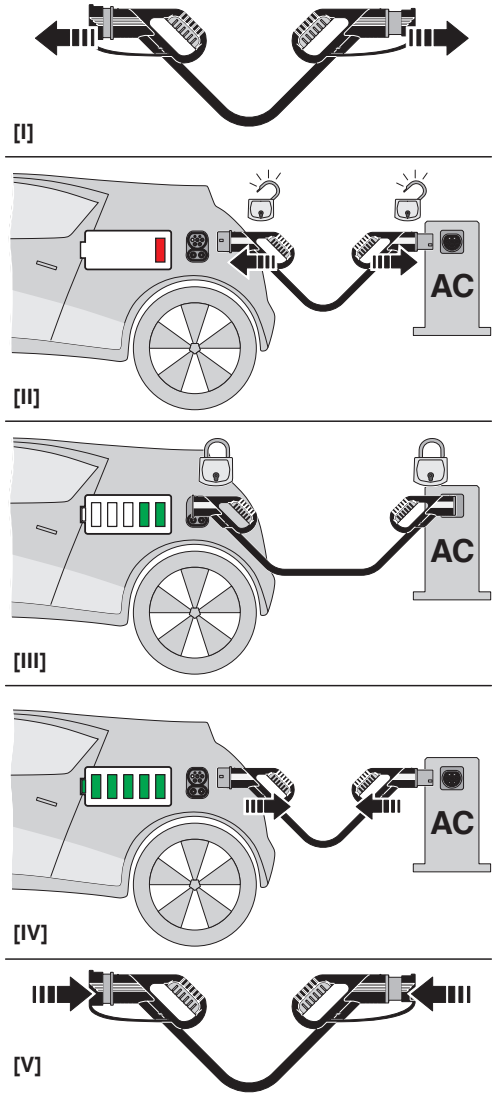

Operating instructions

Schematic diagram

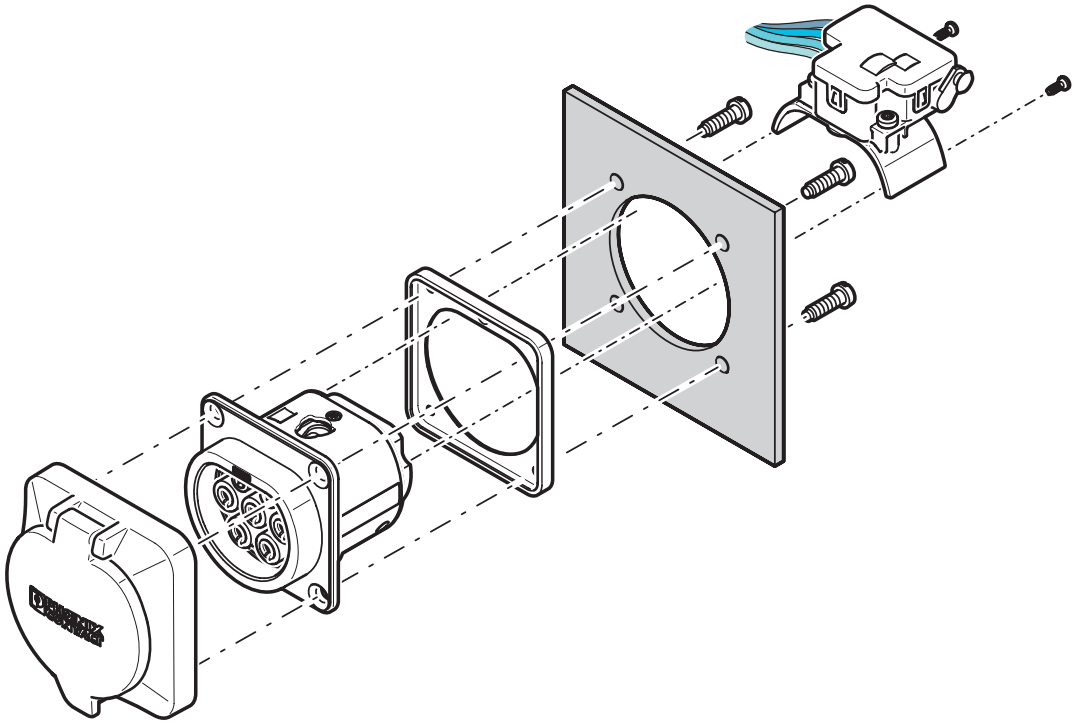

Front mounting with rear protective cover screw connection
Front mounting is only possible when the locking actuator is removed. We recommend using an infrastructure socket outlet without pre-assembled locking actuator (EV-T2M3SE-...E0..., e.g., 1621729).
The screw connection for a protective cover from the accessories range (EV-T2SC) only supports rear mounting. The panel thickness must not exceed 10 mm. The sealing frame that is slid on from the front must contact the housing panel flush with the flat side and must completely surround the infrastructure socket outlet.

Schematic diagram

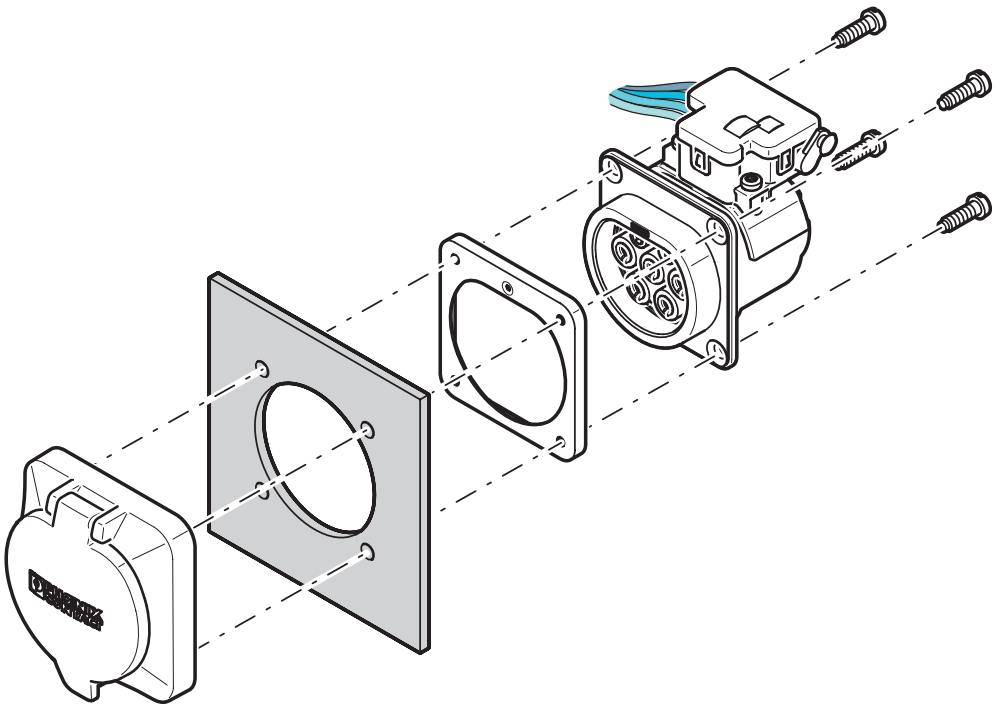

Rear mounting with rear protective cover screw connection
The screw connection for a protective cover from the accessories range (EV-T2SC) only supports rear mounting. The panel thickness must not exceed 5 mm. The sealing frame that is slid on from the rear must contact the housing panel flush with the flat side and must completely surround the infrastructure socket outlet.

Dimensional drawing

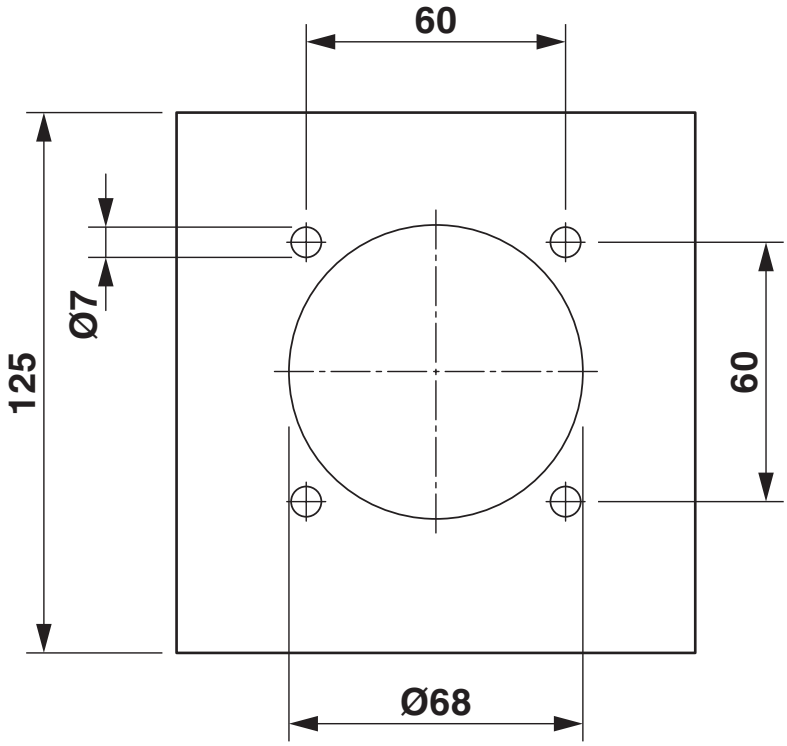

Hole image

Schematic diagram

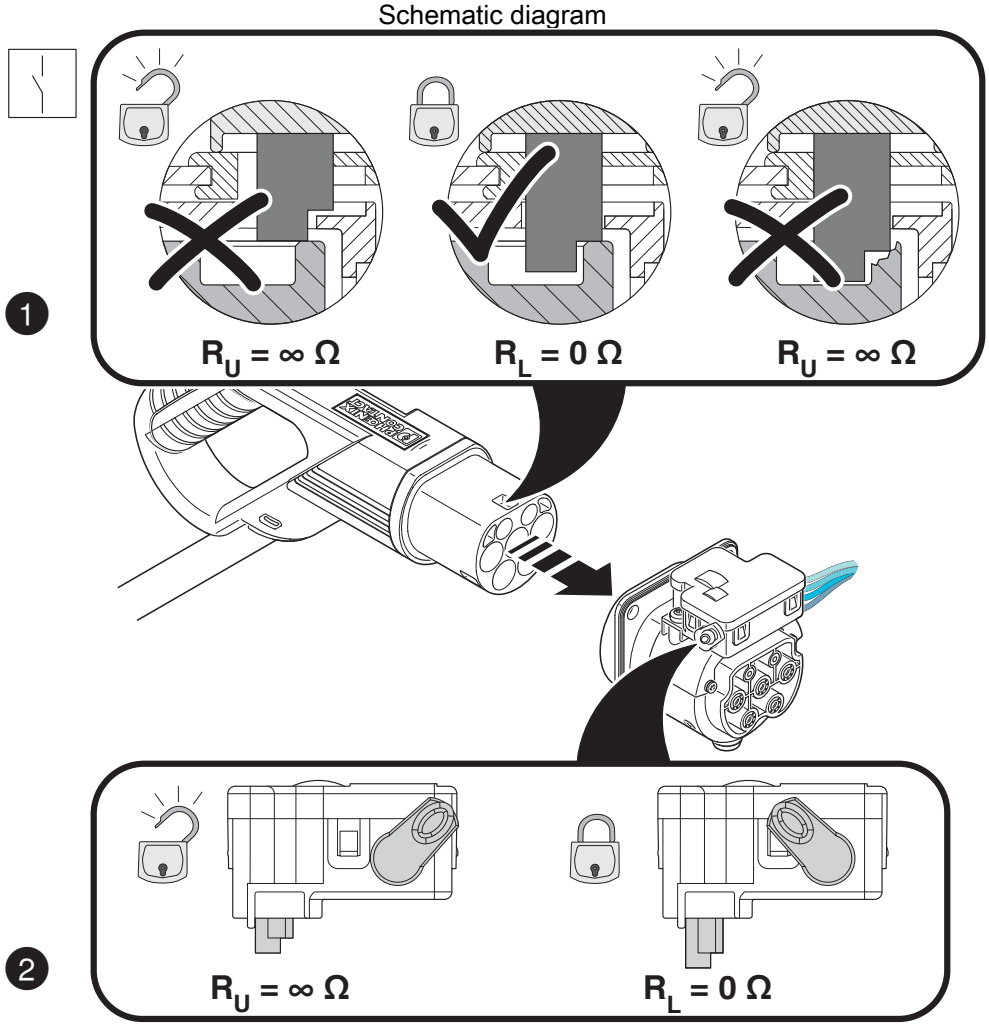

Detection of the Infrastructure Plug

Schematic diagram

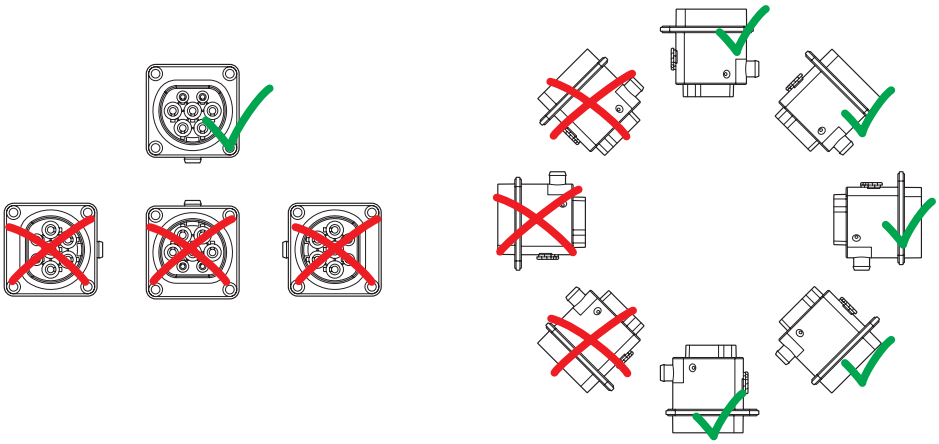

Installation positions

Schematic diagram

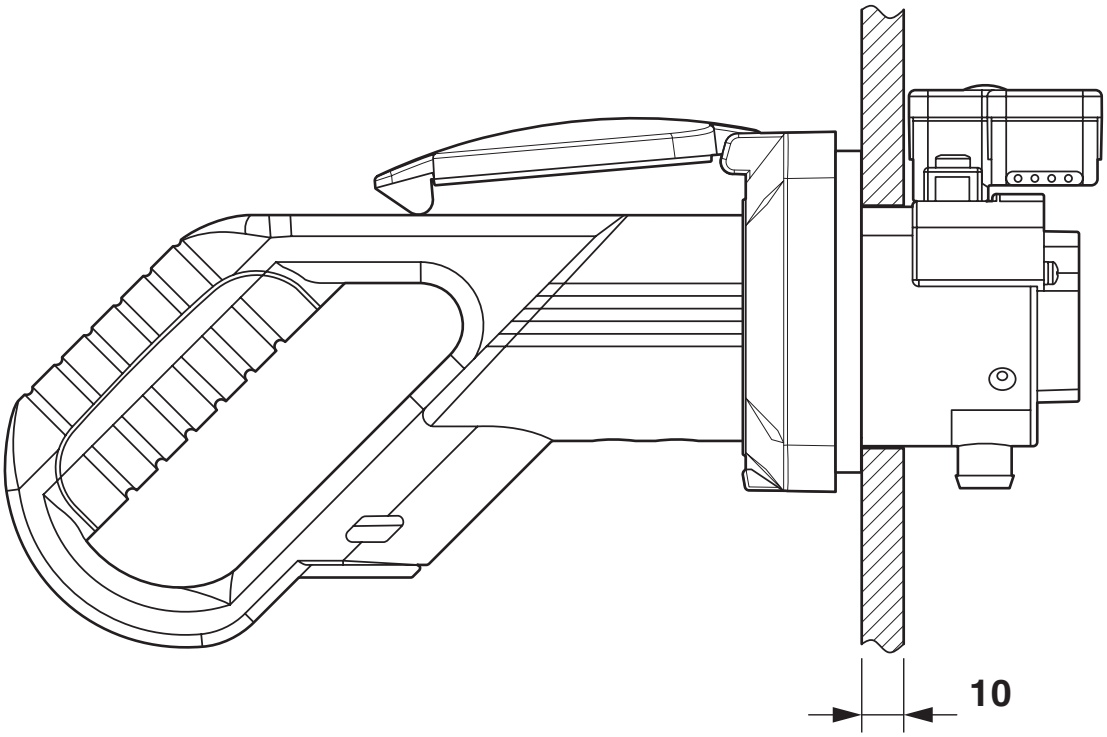

Panel thickness for front mounting (in mm)

Connection diagram

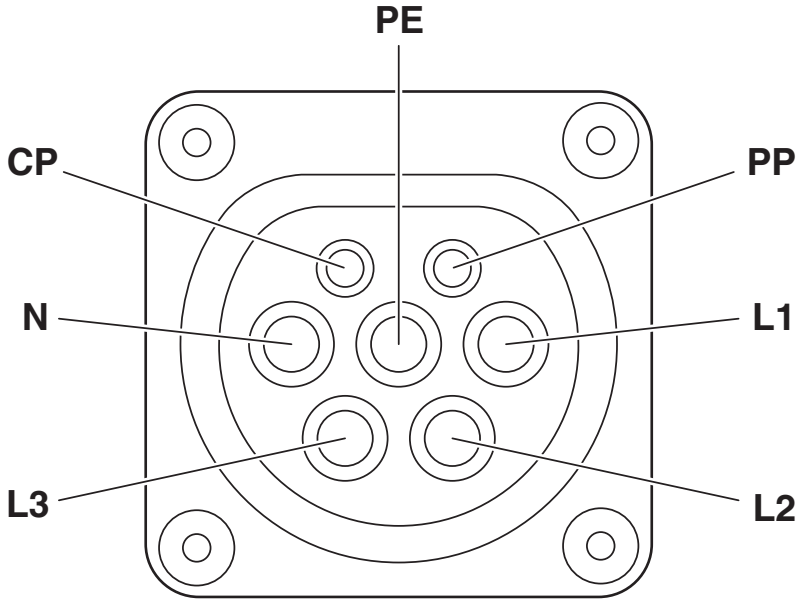

Pin assignment of infrastructure charging socket

Schematic diagram

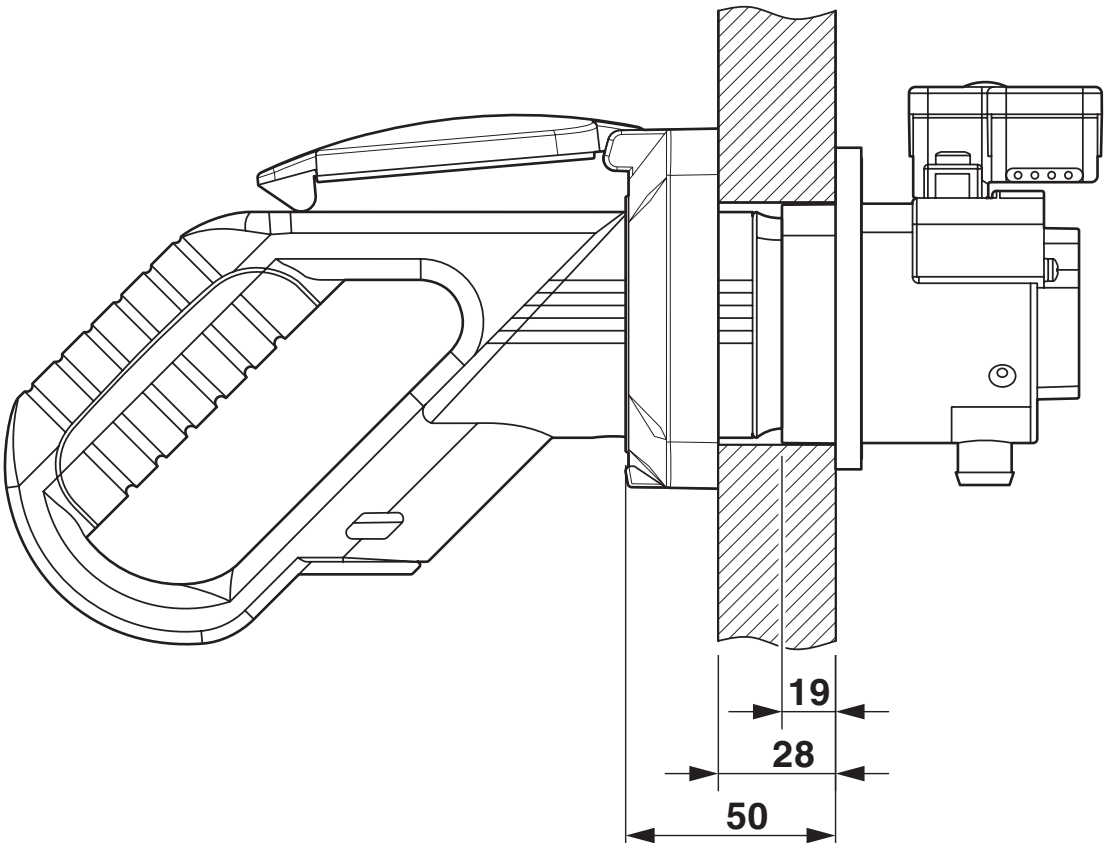

Panel thickness for rear mounting (max. 50 mm, with Phoenix Contact protective cover, max. 22 mm)

Classifications

ECLASS

ECLASS-11.0	27144706

ETIM

ETIM 7.0	EC002898

UNSPSC

UNSPSC 21.0	39121522

Environmental Product Compliance

China RoHS	Environmentally Friendly Use Period = 10;
	For information on hazardous substances, refer to the manufacturer’s declaration available under “Downloads”

Accessories

EV-LABEL-C-SO - Label

1315521

https://www.phoenixcontact.com/us/products/1315521

CHARX connect, Label, Accessories, for AC type 2 infrastructure charging socket and for AC type 2 infrastructure charging plug, DIN EN 17186

EV-T2SC - Protective cover

1405217

https://www.phoenixcontact.com/us/products/1405217

CHARX connect basic, Protective cover, square, Accessories, with self-locking mechanism, for attaching to infrastructure charging sockets, Type 2, IEC 62196-2, Front mounting, M5 thread, housing: black, Embossed PHOENIX CONTACT logo

EV-T2SF - Panel mounting frames

1405218

https://www.phoenixcontact.com/us/products/1405218

CHARX connect basic, Panel mounting frames, Accessories, for attaching to infrastructure charging sockets, Type 2, IEC 62196-2, Front mounting, M5 thread, housing: black, Without logo

EV-GBSCO - Protective cover

1623415

https://www.phoenixcontact.com/us/products/1623415

CHARX connect basic, Protective cover, circular, Accessories, with self-opening mechanism, for attaching to infrastructure charging sockets, GB/T, Type 2, GB/T 20234.2, IEC 62196-2, Front mounting, housing: black, Adhered "PHOENIX CONTACT" sticker

EV-GBSC - Protective cover

1623416

https://www.phoenixcontact.com/us/products/1623416

CHARX connect basic, Protective cover, circular, Accessories, with self-locking mechanism, for attaching to infrastructure charging sockets, GB/T, Type 2, GB/T 20234.2, IEC 62196-2, Front mounting, housing: black, Adhered "PHOENIX CONTACT" sticker

EV-GBSC-D6,5MM - Protective cover

1623888

https://www.phoenixcontact.com/us/products/1623888

CHARX connect basic, Protective cover, circular, Accessories, with self-locking mechanism, for attaching to infrastructure charging sockets, GB/T, Type 2, GB/T 20234.2, IEC 62196-2, Front mounting, housing: black, Adhered "PHOENIX CONTACT" sticker

EV-T2M3S-E-LOCK12V - Locking

1624129

https://www.phoenixcontact.com/us/products/1624129

CHARX connect modular, Locking, Accessories, for attaching to infrastructure charging sockets, Type 2, GB/T, IEC 61851-1, Single wires, length: 0.5 m, locking actuator: 12 V, 4-pos.

EV-T2M3S-E-LOCK24V - Locking

1622317

https://www.phoenixcontact.com/us/products/1622317

CHARX connect modular, Locking, Accessories, with single-core wires, without holder, for locking infrastructure charging sockets when plug is inserted, Type 2, GB/T, IEC 61851-1, Single wires, length: 0.5 m, locking actuator: 24 V, 4-pos.

EV-T2M3S-DRAINAGE-GASKET - Seal

1621668

https://www.phoenixcontact.com/us/products/1621668

CHARX connect basic, Seal, For the discharge nozzle below the infrastructure charging socket if there is no drainage tube present, Type 2, IEC 62196-2

EV-T2M3S-E-LOCK-GASKET - Seal

1621465

https://www.phoenixcontact.com/us/products/1621465

CHARX connect basic, Seal, For the mounting surface of the locking actuator above the infrastructure charging socket when there is no locking actuator present, Type 2, IEC 62196-2

EV-T2M3SE12-3AC32A-0,7M6,0E00 - Infrastructure charging socket

1621729

https://www.phoenixcontact.com/us/products/1621729

EM-CP-PP-ETH - AC charging controller

2902802

https://www.phoenixcontact.com/us/products/2902802

EV charge control is used to charge electrical vehicles on the 3-phase AC mains power supply according to IEC 61851-1 Mode 3. All necessary control functions are integrated. Additional functions are available for various charging applications.

EV-CC-AC1-M3-CBC-SER-HS - AC charging controller

1622452

https://www.phoenixcontact.com/us/products/1622452

The EV-CC-AC1-M3-CBC-SER-HS charging controller with housing for DIN rail mounting is used for charging electric vehicles at 3-phase AC networks according to IEC 61851-1, Mode 3. All charging functions, comprehensive configuration settings as well as a locking controller are already integrated.

EV-CC-AC1-M3-CBC-SER-PCB - AC charging controller

1622453

https://www.phoenixcontact.com/us/products/1622453

The EV-CC-AC1-M3-CBC-SER-PCB charging controller as PCB is used for charging electric vehicles at 3-phase AC networks according to IEC 61851-1, Mode 3. All charging functions, comprehensive configuration settings as well as a locking controller are already integrated.

EV-CC-AC1-M3-CBC-SER-PCB-XC-25 - AC charging controller

1627743

https://www.phoenixcontact.com/us/products/1627743

The EV-CC-AC1-M3-CBC-SER-PCB charging controller as PCB is used for charging electric vehicles at 3-phase AC networks according to IEC 61851-1, Mode 3. All charging functions, comprehensive configuration settings as well as a locking controller are already integrated.

EV-T2M3SE12-3AC32A-0,7M6,0E00 - Infrastructure charging socket

1621729

https://www.phoenixcontact.com/us/products/1621729

EV-CC-AC1-M3-CBC-SER-PCB-MSTB - AC charging controller

1627353

https://www.phoenixcontact.com/us/products/1627353

The EV-CC-AC1-M3-CBC-SER-PCB-MSTB charging controller as a PCB for charging electric vehicles according to IEC 61851-1, Mode 3, Case B (Socket Outlet) or C (Vehicle Connector). Connection via PCB connector on header.

Phoenix Contact 2023 © - all rights reserved
https://www.phoenixcontact.com

Phoenix Contact USA
586 Fulling Mill Road
Middletown, PA 17057, United States
(+717) 944-1300
info@phoenixcon.com