schaffner
MORE POWER TO YOU

Versatile Filtered Power Entry Module

- Rated currents up to 10 A
- For one or two fuses
- Fuses Ø6.3 x 32 mm or Ø5 x 20 mm
- 2-pole rocker switch
- Voltage selector
- Optional earth line choke (E type)

Performance indicators

Attenuation performance

Rated current [A]

Approvals & Compliances

The FN 390 power entry module combines an IEC inlet, mains filter with single or dual-fuse holder, voltage selector and 2-pole rocker switch. Choosing FN 390 product line brings you the rapid availability of a standard filter associated with the necessary safety acceptances. Standard IEC connector filters are a practical solution helping you to pass EMI system approval in a short time. Multiple options designed to offer you the desired solution.

Features and Benefits

- High conducted attenuation performance, based on chokes with high saturation resistance and excellent thermal behavior
- Rear or front mounting
- Single or dual-fuse holder
- USA Ø6.3 x 32 mm or EU Ø5 x 20 mm fuses
- 2-pole rocker switch
- Voltage selector 110-120 V/220-240 V
- Custom-specific versions are available on request

Typical Applications

- Portable electrical and electronic equipment
- Consumer goods
- EDP and office equipment
- Single-phase power supplies, switch-mode power supplies
- Test and measurement equipment

Typical electrical schematic

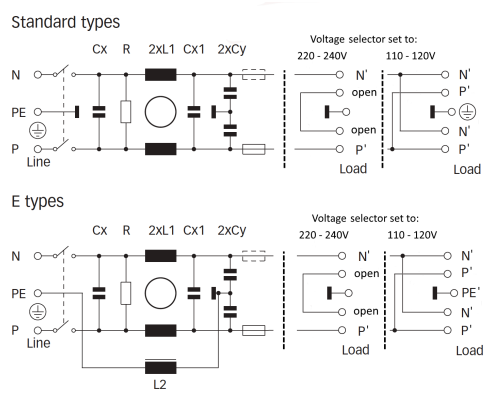

Technical Specifications

Maximum continuous operating voltage	250 VAC, 50/60 Hz
Operating frequency	DC to 400 Hz
Rated currents	1 to 10 A @ 40°C max.
High potential test voltage	P –> PE 2000 VAC for 2 sec P –> N 760 VAC for 2 sec
Protection category	IP 40 according to IEC 60529
Temperature range (operation and storage)	-25°C to +85°C (25/85/21)
Design corresponding to	UL 1283, CSA 22.2 No. 8 1986, IEC/EN 60939
Flammability corresponding to	UL 94V-2 or better
MTBF @ 40°C/230 V (Mil-HB-217F)	2,200,000 hours
Voltage selector description	
Function	Series/parallel
Voltage marking	
Series	110-120 V
Parallel	220-240 V
Rocker switch description	
Fuse holder	1 or 2 fuses (Ø5 x 20 mm) (certified to IEC 60127-6), power acceptance 1.6W @ Ta 23°C per pole for 2 fuses. 2.5W, if only 1 pole is used.
Function	2-pole, dark not illuminated Marking I - 0
Electrical specifications	Inrush current 51 A 6,000 on-off operations according to UL 1054, TV 5 10,000 on-off operations according to ENEC
Mechanical life	50,000 cycles
Switch ratings	
USA (UL) and Canada (C-UL)	10 A, 125 VAC; 10 A, 250 VAC; 1/3 HP
Europe (ENEC)	10 A (4 A), 250 VAC*

* Value in () relates to the inductive current charge: cos φ=0.65

Filter Selection Table

Filter	Rated current	Leakage current*	Inductance		Capacitance			Resistance	Output	Fuses**	Weight
	@ 40°C (25°C)	@ 230 VAC/50 Hz	L1	L2	Cx	Cx1	Cy	R	connections		
	[A]	[µA]	[mH]	[mH]	[nF]	[nF]	[nF]	[kΩ]		[Qty]	[g]
FN 393-1-05-11	1 (1.2)	560	7.5		220		3.3	1000	05-11	1	200
FN 393-2.5-05-11	2.5 (3)	560	2		220		3.3	1000	05-11	1	200
FN 393-6-05-11	6 (7.2)	560	0.45		220		3.3	1000	05-11	1	200
FN 394-1-05-11	1 (1.2)	560	7.5		220		3.3	1000	05-11	2	200
FN 394-2.5-05-11	2.5 (3)	560	2		220		3.3	1000	05-11	2	200
FN 394-6-05-11	6 (7.2)	560	0.45		220		3.3	1000	05-11	2	200
FN 393 E-1-05-11	1 (1.2)	560	7.5	0.4	220		3.3	1000	05-11	1	205
FN 393 E-2.5-05-11	2.5 (3)	560	2	0.4	220		3.3	1000	05-11	1	205
FN 393 E-6-05-11	6 (7.2)	560	0.45	0.4	220		3.3	1000	05-11	1	205
FN 394 E-1-05-11	1 (1.2)	560	7.5	0.4	220		3.3	1000	05-11	2	205
FN 394 E-2.5-05-11	2.5 (3)	560	2	0.4	220		3.3	1000	05-11	2	205
FN 394 E-6-05-11	6 (7.2)	560	0.45	0.4	220		3.3	1000	05-11	2	205
FN 1393-1-05-11	1 (1.2)	797	16		220	100	4.7	470	05-11	1	210
FN 1393-2.5-05-11	2.5 (3)	797	8		220	100	4.7	470	05-11	1	210
FN 1393-6-05-11	6 (7.2)	797	2.5		220	100	4.7	470	05-11	1	210
FN 1393-10-05-11	10 (12)	797	0.6		220	100	4.7	470	05-11	1	210
FN 1394-1-05-11	1 (1.2)	797	16		220	100	4.7	470	05-11	2	210
FN 1394-2.5-05-11	2.5 (3)	797	8		220	100	4.7	470	05-11	2	210
FN 1394-6-05-11	6 (7.2)	797	2.5		220	100	4.7	470	05-11	2	210
FN 1394-10-05-11	10 (12)	797	0.6		220	100	4.7	470	05-11	2	210

* Maximum leakage under normal operating conditions. Note: if the neutral line is interrupted, worst case leakage could reach twice this level.
** Filters are delivered without fuse.
Note: for medical versions please contact your local partner within Schaffner's global network.

Product selector

FN (1)39xx-y-zz

05-11:	Faston 6.3 x 0.8mm
1 to 10:	Rated current
Blank:	Standard version
E:	Optional earth line choke
3:	1 fuse (Ø5 x 20mm or Ø6.3 x 32mm)
4:	2 fuses (Ø5 x 20mm or Ø6.3 x 32mm)
Blank:	Standard version
1:	Additional Cx1 capacitor and higher inductivity

For example: FN 393-1-05-11, FN 394 E-2.5-05-11, FN 1394-10-05-11

Typical Filter Attenuation

Per CISPR 17; A=50 Ω/50 Ω sym; B=50 Ω/50 Ω asym; C=0.1 Ω/100 Ω sym; D=100 Ω/0.1 Ω sym

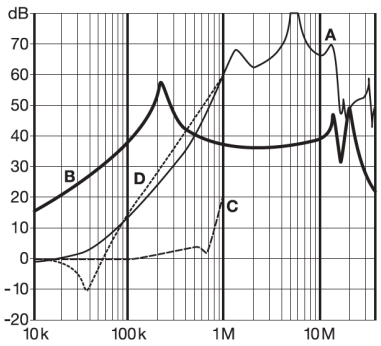

FN 39x: 1 A types

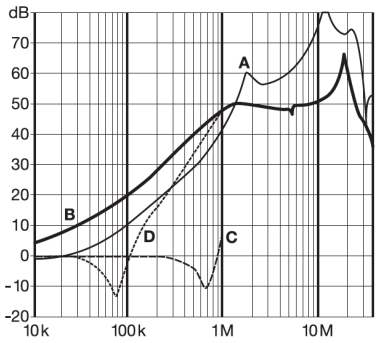

FN 39x: 2.5 A types

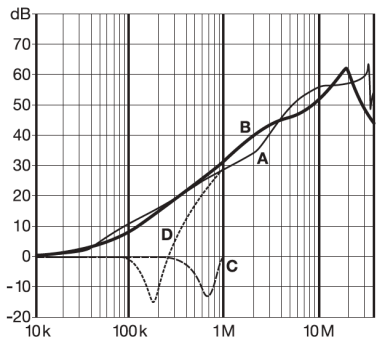

FN 39x: 6 A types

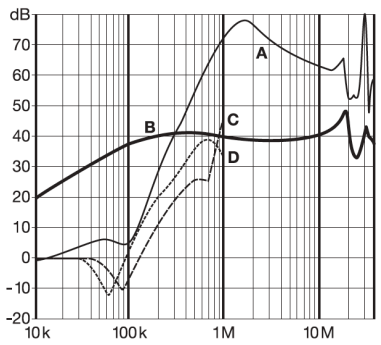

FN 139x: 1 A types

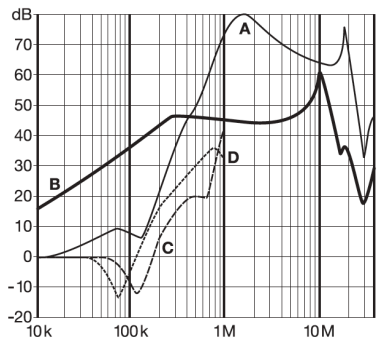

FN 139x: 2.5 A types

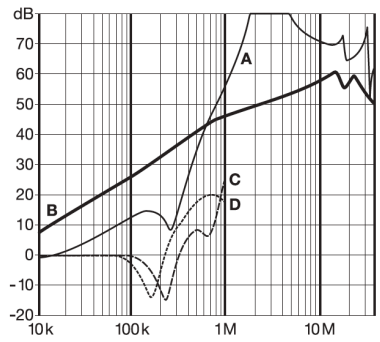

FN 139x: 6 and 10 A types

Mechanical Data

1 to 10 A types

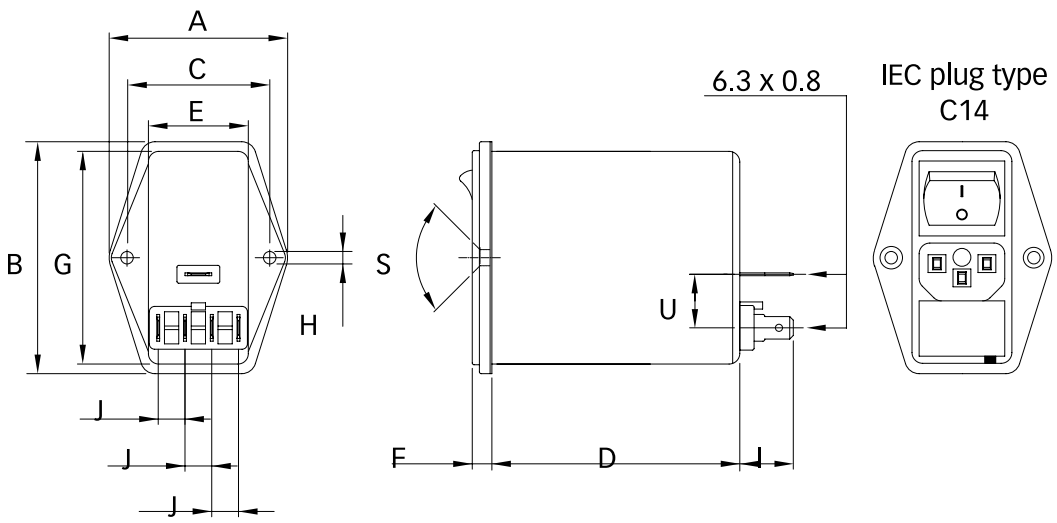

Panel cut out

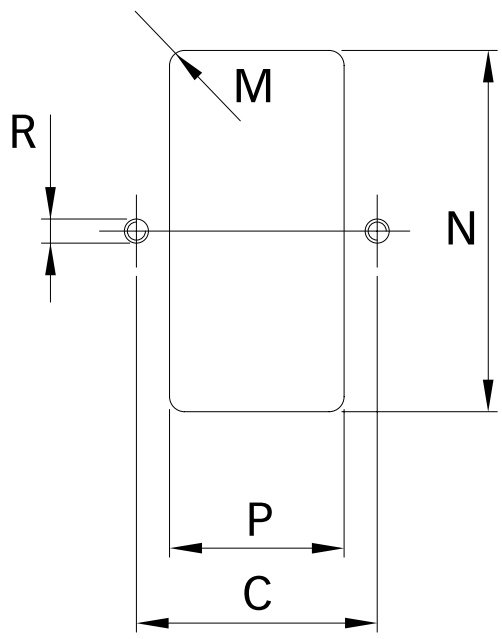

Dimensions

	1 to 10 A	Tolerances
A	50	±0.3
B	65	±0.3
C	40	±0.1
D	70	±0.5
E	28.5	±0.3
F	5.5	±0.3
G	59.8	±0.2
H	Ø 3.3	
I	13.5	±0.5
J	7.5	
M	R ≤ 2.5	
N	60	+0.5/-0
P	29	+0.5/-0
R	M3	
S	90°	
U	15	±0.3

All dimensions in mm; 1 inch=25.4 mm
Tolerances according: ISO 2768-m/EN 22768-m

Please visit www.schaffner.com to find more details on filter connections.

Headquarters, Global Innovation and Development

Switzerland
Schaffner Group
Industrie Nord
Nordstrasse 11e
4542
Luterbach
+41 32 681 66 26
info@schaffner.com

To find your local partner within Schaffner's global network schaffner.com

© 2022 Schaffner Group

The content of this document has been carefully checked and understood. However, neither Schaffner nor its subsidiaries assume any liability whatsoever for any errors or inaccuracies of this document and the consequences thereof. Published specifica-tionsw are subject to change without notice. Product suitability for any area of application must ultimately be determined by the customer. In all cases, products must never be operated outside their published specifications. Schaffner does not guarantee the availability of all published products. This disclaimer shall be governed by substantive Swiss law and resulting disputes shall be settled by the courts at the place of business of Schaffner Holding AG. Latest publications and a complete disclaimer can be downloa-ded from the Schaffner website. All trademarks recognized.

Sales and Application Centers

China
Schaffner EMC Ltd. Shanghai
T20-3 C No 565 Chuangye Road Pudong district
201201
Shanghai
+86 2138139500
cschina@schaffner.com

Finland
Schaffner Oy
Sauvonrinne 19 H
8500
Lohja
+358 50 468 7284
finlandsales@schaffner.com

France
Schaffner EMC S.A.S.
16-20 Rue Louis Rameau
95875
Bezons
+33 1 34 34 30 60
francesales@schaffner.com

Germany
Schaffner Deutschland GmbH
Schoemperlenstrasse 12B
76185
Karlsruhe
+49 721 56910
germanysales@schaffner.com

India
Schaffner India Pvt. Ltd
Regus World Trade Centre
WTC 22nd Floor Unit No 2238 Brigade Gateway Campus 26/1 Dr. Rajkumar Road
Malleshwaram (W)
560055
Bangalore
+91 8067935355
indiasales@schaffner.com

Italy
Schaffner EMC S.r.l.
Via Ticino, 30
20900
Monza (MB)
+39 039 21 41 070
italysales@schaffner.com

Japan
Schaffner EMC K.K.
ISM Sangenjaya 7F
1-32-12 Kamiuma Setagaya-ku
154-0011
Tokyo
+81 3 5712 3650
japansales@schaffner.com

Singapore
Schaffner EMC Pte Ltd.
Blk 3015A Ubi Road 1 #05-09 Kampong Ubi Industrial Estate
408705
Singapore
+65 63773283
singaporesales@schaffner.com

Spain
Schaffner EMC España
Calle Caléndula 93 Miniparc III Edificio E El Soto de Moraleja Alcobendas
28109
Madrid
+34 917 912 900
spainsales@schaffner.com

Sweden
Schaffner EMC AB
Östermalmstrorg 1
114 42
Stockholm
+46 8 5050 2425
swedensales@schaffner.com

Switzerland
Schaffner EMV AG
Industrie Nord
Nordstrasse 11e
4542
Luterbach
+41 32 681 66 26
switzerlandsales@schaffner.com

Taiwan
Schaffner EMV Ltd.
U-Town
20 Floor-2 No 97 Section 1 XinTai 5th Road
XiZhi District
22175
New Taipei City
+886 226975500
taiwansales@schaffner.com

Thailand
Schaffner EMC Co. Ltd.
Sathorn Square Tower
Room 3780 37FL 98 North-Sathorn Rd Silom
Bangrak
10500
Bangkok
+66 621056397
thailandsales@schaffner.com

United Kingdom
Schaffner Ltd.
Suite 1 Oakmede Place
Terrace Road
RG42 4JF
Binfield
+44 118 9770070
uksales@schaffner.com

United States
Schaffner EMC Inc.
52 Mayfield Avenue
Edison, New Jersey
+1 732 225 9533
usasales@schaffner.com