THIS DRAWING IS UNPUBLISHED. RELEASED FOR PUBLICATION -
© COPYRIGHT BY - ALL RIGHTS RESERVED.

REVISIONS

P	LTR	DESCRIPTION	DATE	DWN	APVD

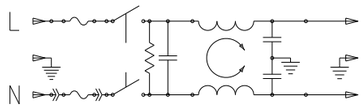

CLASS I, 1 MOOP
GENERAL PURPOSE OPTION

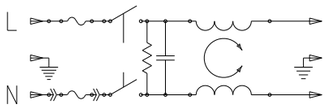

CLASS I, 1 MOPP
-HG OPTION

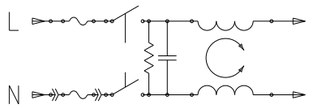

CLASS II, 2 MOOP
-NG OPTION

50 OHM - 50 OHM INSERTION LOSS (dB)

	COMMON MODE								DIFFERENTIAL MODE							
-__	3A		6A		10A		12A		3A		6A		10A		12A	
MHz	TYP	MIN	TYP	MIN	TYP	MIN	TYP	MIN	TYP	MIN	TYP	MIN	TYP	MIN	TYP	MIN
0.05	9	3	0	0	0	0	0	0	14	8	13	7	14	8	14	8
0.15	18	12	3	0	1	0	1	0	23	17	23	17	23	17	23	17
0.3	24	18	7	1	3	0	3	0	29	23	29	23	29	23	29	23
0.5	29	23	12	6	6	0	6	0	33	27	34	28	34	28	34	28
1	34	24	17	7	10	0	10	0	37	27	39	29	40	30	40	30
3	45	35	26	16	19	9	19	9	38	28	47	37	56	46	56	46
5	53	43	30	20	24	14	24	14	44	34	47	37	56	46	56	46
10	49	34	36	21	30	15	30	15	60	45	59	44	35	20	35	20
30	30	15	37	22	33	18	33	18	50	35	49	34	47	32	47	32

	COMMON MODE								DIFFERENTIAL MODE							
-NG	3A		6A		10A		12A		3A		6A		10A		12A	
-HG																
MHz	TYP	MIN	TYP	MIN	TYP	MIN	TYP	MIN	TYP	MIN	TYP	MIN	TYP	MIN	TYP	MIN
0.05	9	3	0	0	0	0	0	0	14	8	14	8	14	8	14	8
0.15	18	12	3	0	1	0	1	0	23	17	23	17	23	17	23	17
0.3	24	18	7	1	3	0	3	0	29	23	29	23	29	23	29	23
0.5	28	22	11	5	6	0	6	0	33	27	34	28	34	28	34	28
1	31	21	14	4	9	0	9	0	38	28	40	30	40	30	40	30
3	34	24	18	8	12	2	12	2	41	31	48	38	53	43	53	43
5	33	23	18	8	12	2	12	2	41	31	50	40	60	50	60	50
10	30	15	16	1	10	0	10	0	40	25	51	36	51	36	51	36
30	24	9	14	0	9	0	9	0	39	24	46	31	43	28	43	28

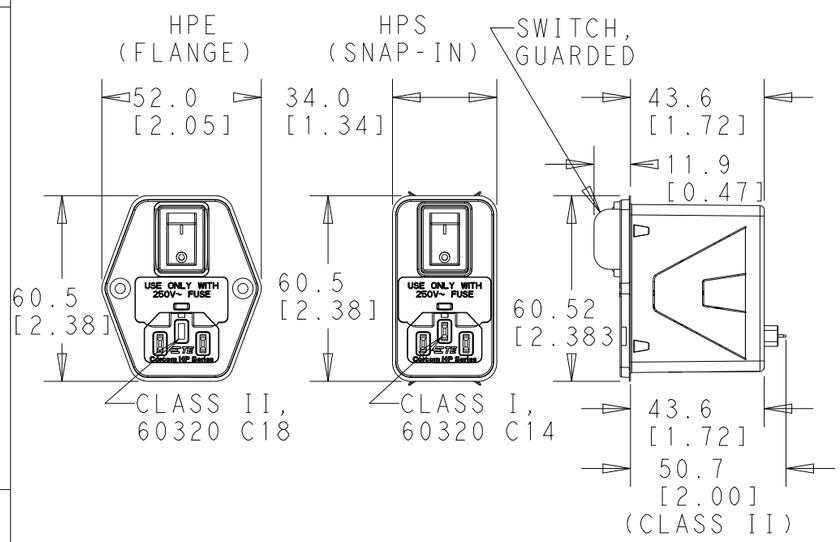

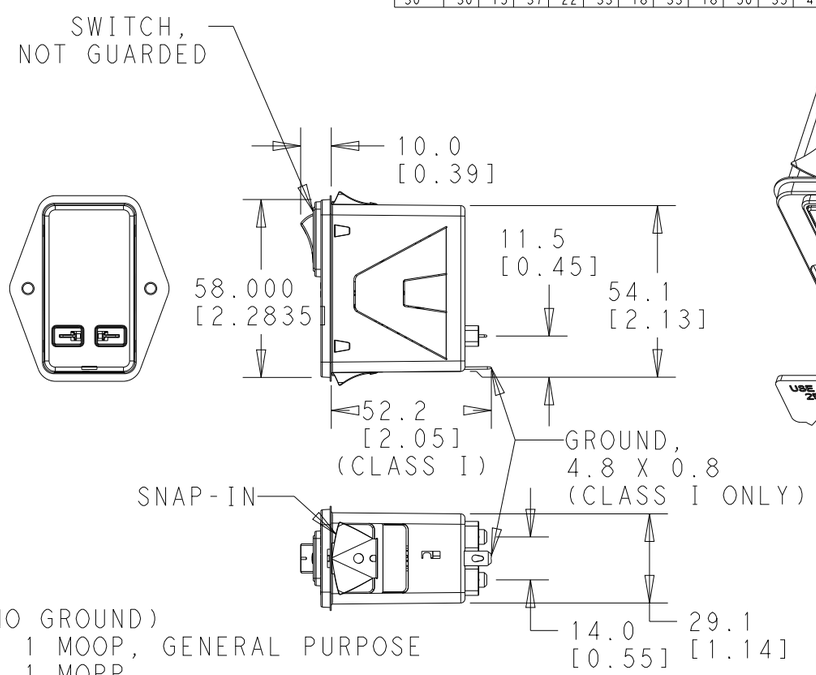

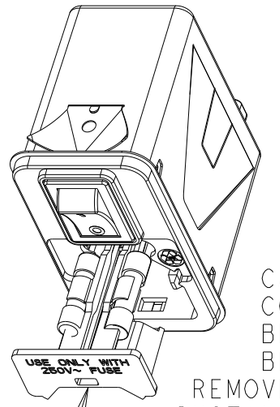

CAUTION!
CORRECT FAULT
BEFORE REPLACING
BLOWN FUSES.
REMOVE PLUG TO
INSTALL/REPLACE FUSE.
USE TOOL TO GENTLY PRY
FUSE DRAWER OPEN. PULL
DRAWER STRAIGHT OUT
TO POSITIVE STOP.
DO NOT TWIST OR FLEX OR
REMOVE DRAWER PAST POSITIVE STOP.
INSERT/REPLACE FUSES AND GENTLY SLIDE
FUSE DRAWER STRAIGHT IN.

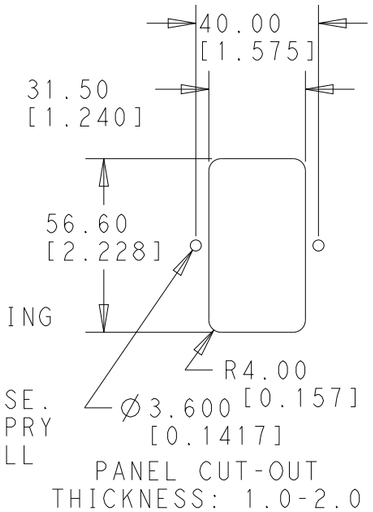

PANEL CUT-OUT
THICKNESS: 1.0-2.0

3 HP S G D 1-NG

- 1-NG: CLASS (GROUND / NO GROUND)
  - [ ] - CLASS I, 1 MOOP, GENERAL PURPOSE
  - -HG - CLASS I, 1 MOPP
  - -NG - CLASS II, 2 MOOP*
- 1: OUTPUT STYLE
  - 1 - 4.8 X 0.8 SPADE TERMINALS
- D: FUSE HOLDER (Ø5 MM X 20 MM)
  - D - DUAL
  - S - SINGLE
- G: SWITCH GUARD
  - G - GUARDED
  - N - NOT GUARDED
- S: STYLE
  - E - FLANGES
  - S - SNAP-IN
- HP: HP SERIES
- 3: FILTER CURRENT RATING: 3, 6, 10 OR 12A**

EXAMPLE: 12HPENS1
12 A
FLANGED
NO SWITCH GUARD
SINGLE-FUSE
GENERAL PURPOSE

* CLASS II WITH INSULATED FASTONS.
** RATED 12A UL/CSA, 10A ULEU/ENEC.

HIPOT RATING (FOR 2 S)
L-G CLASS I : 2250 VAC
L-G CLASS II: 3000 VAC (-NG)*
LINE TO LINE: 1500 VDC
OPERATING FREQUENCY: 50-60 Hz
RATED VOLTAGE: 120/250 VAC
OPERATING AMBIENT TEMP: -40°C TO 40°C
STORAGE TEMPERATURE : -40°C TO 85°C
COMPATIBLE WITH V-LOCK PLUG.

MAX LEAKAGE PER LINE TO GROUND
(I, 1MOOP)@ 120V,60Hz/250V,50Hz:70/140µA
-HG,-NG @ 120V,60Hz/250V,50Hz: 2 / 5µA
HUMIDITY: 21 DAYS, 40°C @ 95%RH
CURRENT OVERLOAD: 2X RATED FOR 8 SEC
SWITCH: DOUBLE INS, 10,000 CYCLES, 51 A
SAFETY AGENCIES: UL RECOGNIZED,
CSA CERTIFIED. UL-EU AND ENEC APPROVED.
STANDARDS: EN60939-3, C22.2#8, EN60601-1*

USE 14 AWG POWER CORD FOR > 6 A.
LIMIT FAULT CURRENT TO 12 A AT 40C.

THE BEST WAY TO SELECT AND QUALIFY A
FILTER IS FOR YOUR ENGINEERING STAFF
TO TEST THE UNIT IN YOUR EQUIPMENT.

THIS DRAWING IS A CONTROLLED DOCUMENT.

DIMENSIONS: mm

TOLERANCES UNLESS OTHERWISE SPECIFIED:

0 PLC	±2
1 PLC	±1.0
2 PLC	±0.40
3 PLC	±0.200
4 PLC	±0.1000
ANGLES	±-

MATERIAL - -
FINISH - -

DWN	EC	06JUL22
CHK	-	-
APVD	EC	06JUL22
PRODUCT SPEC	-	
APPLICATION SPEC	-	
WEIGHT	-	

TE Connectivity

NAME
HP SERIES
CUSTOMER DRAWING
-

SIZE	CAGE CODE	DRAWING NO	RESTRICTED TO
A3	-	C-P-1609004-0	-

CUSTOMER DRAWING | SCALE 1:2 | SHEET 1 OF 1 | REV A

1470-19 (3/13)