PRODUCT CODE:- ENP-LD5-30	CATEGORY:- NEMA TWIST LOCK PLUG

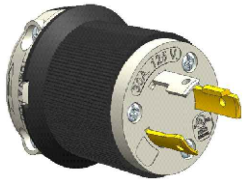

Twist Lock L5-30P Type
30Ampere,125volt
2 Pole,3 Wire Grounding

LISTED
E362808



BASIC DIMENSIONS:-

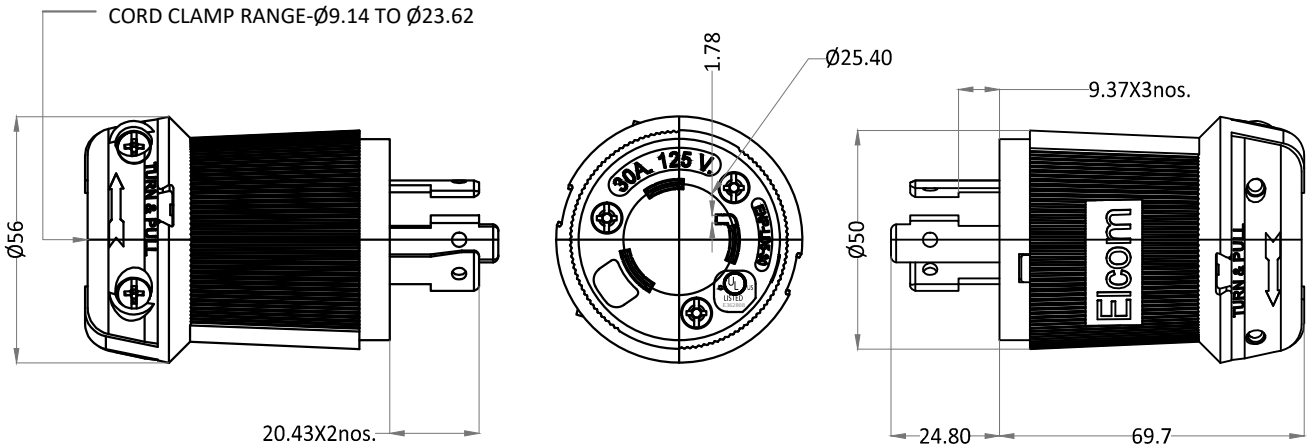

SPECIFICATION TABLE:-

SR.NO.	PARAMETER		SPECIFICATION
1	Connector Type		Twist lock L5-30P type
2	V/A Rating		125Vac, 30A
3	Insulation Resistance At 500 V DC		100 Mohms min.
4	H.V.Break Down Test (For 1-Minute)		2 KVAC
5	Terminals		Screw-type 10 AWG
6	Permissible Temp.	(a) With/Without Load	0°C TO 75°C
7	Material	(a) Body	Nylon, Black
		(b) Cord Clamp	Nylon, Natural (White) Tightening Torque : 18-21 Kg-cm.
		(c) Contact Holder	Nylon, Natural (White)
		(d) Retainer	PolyCarbonate, Clear
		(e) Contact Blades	Copper Alloy, Nickel plated/Unplated
		(f) Terminal screws	Brass Tightening Torque : 12 Kg-cm min.
8	Reference Standard		UL-498, UL-486E, NEMA WD 6 CAN/CSA C22.2 No.0-M91, CSA C22.2 No.42-99
9	Approvals		File no.E362808 (UL LISTED)
10	Flammability		UL 94, V-0

						APP	12.04.14	GJG	
						CHK	12.04.14	KAK	
						DRN	12.04.14		
REV	IS	WAS	DATE	SIGN	APP.	BY	DATE	SIGN	

Plot E-4, Kagal Five Star
MIDC, Kagal, Kolhapur,
MH - 416236, India
Elcom International Pvt. Ltd.
www.elcom-in.com

UNSP.TOLERANCE				DIMNS. IN mm	WT(Gm) Max.	SCALE:- NTS.	PROJECTION	SHEET	DRAWING NUMBER
OVER	-	1	10	Moulding, plating details as per Bill of Material Unspecified colour is Black, GF:Glass filled.				1 OF 1	P E N P 2 5 3 0 REVISION 0
UP TO	1	10	-						
±	0.2	0.3	0.5						

F:ENG-08.00

Note: Technical specifications are subject to change without prior notice

Copyright © 2019 by Elcom International Pvt.Ltd, India. All rights reserved