LENGTH TABLE	
PART NUMBER	LENGTH (METERS)
ATHD04-1-12P-10G-M1	1 (3.28FT)
ATHD04-1-12P-10G-M2	2 (6.56FT)
ATHD04-1-12P-10G-M4	4 (13.12FT)
ATHD04-1-12P-10G-M5	5 (16.40FT)
ATHD04-1-12P-10G-M10	10 (32.80FT)

PLEASE CONTACT CSR FOR ADDITONAL AVAILABLE OPTIONS

REVISIONS						
REV	ZONE	ECO	DESCRIPTION	DATE	BY	APPR
A1	–	–	RELEASED	3/31/2022	RO	WS

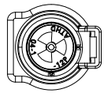

FACE VIEW

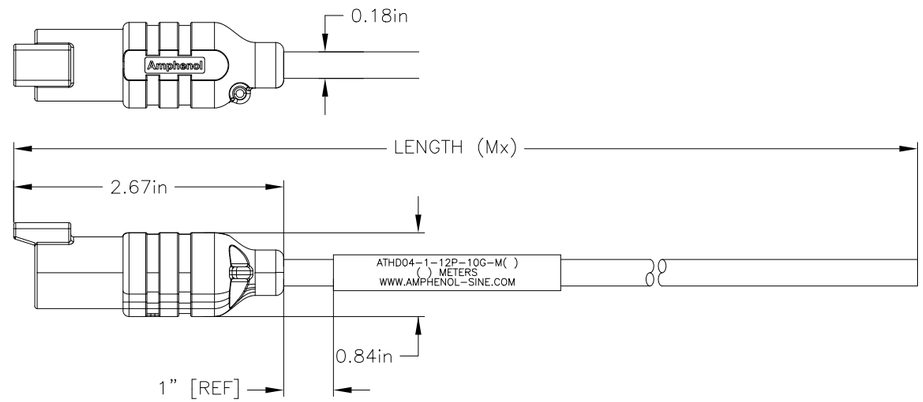

WIRING DIAGRAM



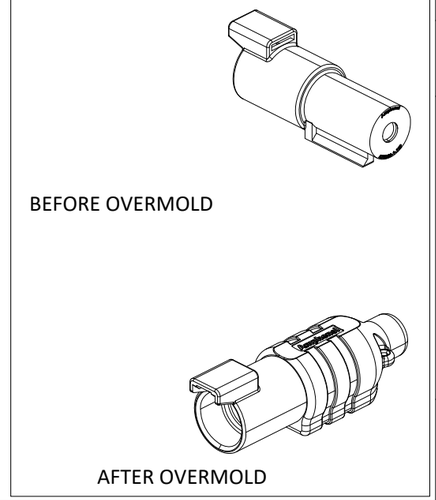

NOTES: UNLESS OTHERWISE SPECIFIED

1. MATERIAL:
   HOUSING: PA66
   SEAL: SILICONE RUBBER

2. MODIFICATIONS: OVERMOLDED (PA)

3. CONNECTOR SPECIFICATIONS:
   3.1 CURRENT RATING: 40AMPS
   3.2 CABLE ASSEMBLY OPERATING TEMPERATURE: -40 TO +100C
   3.3 CONTACT: COPPER ALLOY, NICKEL PLATED
   3.4 DIELECTRIC WITHSTANDING VOLTAGE: LESS THAN 2 MILLIAMPS CURRENT LEAKAGE @ 1500 VOLTS AC.
   3.5 INSULATION RESISTANCE: 1000 MEGAOHMS MIN @ 25C
   3.6 MOISTURE RESISTANCE: IP68 MATED CONDITION (1M OF WATER FOR 24 HOURS).
   3.7 MATING CYCLE DURABILITY: 100 CYCLES
   3.8 RoHS COMPLIANT

4. WIRE SPECIFICATIONS:
   COMPONENTS: 10AWG, PVC INSULATED CONDUCTOR
   105/30 STRANDS BARE COPPER.
   INSULATION: PVC, BLACK
   600V AC/DC

5. APPROVALS:
   UL TYPE AWM, STYLE 1015.
   CSA TYPE TEW.
   OIL RESISTANT I
   SUN RESISTANT I
   FT1 FLAME RATING
   ROHS COMPLIANT.

6. MATING PART: ATHD06-1-12S PLUG.
   MATING CABLE ASSEMBLY: ATHD06-1-12S-10G-Mx

7. ALL DIMENSIONS ARE FOR REFERENCE USE ONLY.

QUANTITY	PART NUMBER	DESCRIPTION	ITEM

MATERIALS LIST

UNLESS OTHERWISE SPECIFIED
1) All dimensions are in metric(mm).
2) Tolerances are as follows:
1 PL DEC ±0.30 | Fractions ±1/64
2 PL DEC ±0.15 | Angles ±1°
3 PL DEC ±0.08
3) Note reference = X

MATERIAL SPECIFICATIONS:

PROCESS SPECIFICATIONS:

NEXT ASS'Y:

SIGNATURES		DATE
DRAWN:	RO	2/25/2022
CHECKED:	WS	3/22/2022
ENGINEER:	RO	
APPROVAL:	WS	3/25/2022
CUSTOMER:		

THIS DRAWING IS SUPPLIED FOR INFORMATION ONLY. DESIGN FEATURES, SPECIFICATIONS AND PERFORMANCE DATA SHOWN HEREON ARE THE PROPERTY OF THE AMPHENOL CORPORATION. NO RIGHTS OF REPRODUCTION ARE IMPLIED. ALL DIMENSIONS ARE SUBJECT TO NORMAL MANUFACTURING VARIATIONS.

Amphenol

Sine Systems - www.amphenol-sine.com
44724 Morley Drive
Clinton Township, MI 48036

1 POS RECEPT SZ 12 MOLDED, PIN SIZE 12, 10AWG, SINGLE-ENDED WIRED ASSY, AMPHENOL ATHD CONNECTOR ATHD04-1-12P, X METERS

SIZE	TYPE	DWG NO:	REVISION
C	C-	ATHD04-1-12P-10G-Mx	A1

SCALE: NONE | ATHD04-1-12P-10G-Mx | SHEET 1 OF 1

TITLE:
DWG NO:
REV:
SH:
OF: