PART NUMBER	LENGTH (METERS)
CA0911F118003	0.3M (0.98 FEET)
CA0911F118005	0.5M (1.64 FEET)
CA0911F118010	1M (3.28 FEET)

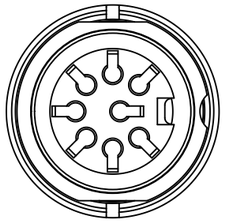

FEMALE RECEPTACLE

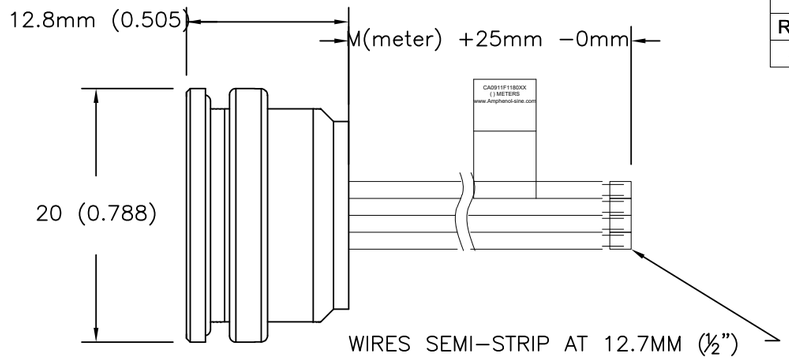

WIRING DIAGRAM

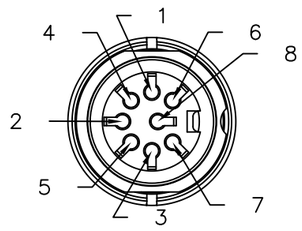

FACE VIEW

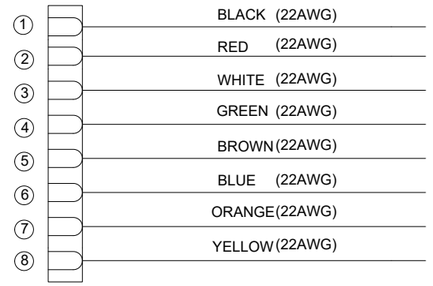

REVISIONS						
REV	ZONE	ECO	DESCRIPTION	DATE	BY	APPR
A1	-	-	TECHNICAL DATA SHEET RELEASE	20-JULY-17	RO	-

CAN BE USED WITH MATING MALE CABLE # CA0911A800801012

CONTACT YOUR DISTRIBUTOR FOR OTHER MATING OPTIONS

INSTALLATION NOTES & PANEL CUTOUT

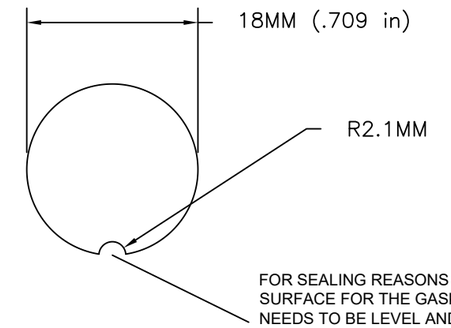

FOR SEALING REASONS THE SURFACE FOR THE GASKET NEEDS TO BE LEVEL AND FREE OF BURRS.

PANEL THICKNESS: MAX 3.5MM

TIGHTENING TORQUE 0.7NM

RECOMMENDED TOOL: N450910001

1) MATERIALS:
- COUPLING NUT: ZINC DIE CAST
- INSULATION INSERT: THERMOPLASTIC
- CONTACT: SILVER PLATED
- WIRE RATING: 22 AWG, UL STYLE 1569 300V 105°C (AWM), CSA TYPE TR-64 300V 90°C, UL VW-1 FLAME TEST
- CABLE JACKET MATERIAL: PVC
- NUMBER OF CONDUCTORS: (8) 22AWG

2) CONNECTOR ELECTRICAL DATA:
- CURRENT (MAX): 7A AT 40°C
- VOLTAGE (MAX): 300V AC/DC
- INSULATION RESISTANCE: 100M OHMS PER IEC 60512-3-1
- RATED IMPULSE WITHSTAND VOLTAGE: 1200V

3) CONNECTOR MECHANICAL DATA:
- TEMPERATURE RANGE: -25°C TO +100°C
- PROTECTION: IP67/IP68 (PER MATED CONDITION)
- MATING CYCLES: >500

4) RoHS COMPLIANT

INDUSTRIAL@AMPHENOL TRUSTED GLOBALLY

	PART NUMBER	DESCRIPTION	ITEM
QUANTITY	MATERIALS LIST		

UNLESS OTHERWISE SPECIFIED
1) All dimensions are in metric(mm).
2) Tolerances are as follows:
1 PL DEC ±0.30 | Fractions ±1/64
2 PL DEC ±0.15 | Angles ±1°
3 PL DEC ±0.08
3) Note reference = X

SIGNATURES		DATE
DRAWN:	RO	6-JUNE-17
CHECKED:	AA	8-JUNE-17
ENGINEER:	RO	
APPROVAL:	WS	13-JUNE-17

MATERIAL SPECIFICATIONS:

CUSTOMER:

PROCESS SPECIFICATIONS: IPC-WHMA-A-620

NEXT ASS'Y:

THIS DRAWING IS SUPPLIED FOR INFORMATION ONLY. DESIGN FEATURES, SPECIFICATIONS AND PERFORMANCE DATA SHOWN HEREON ARE THE PROPERTY OF THE AMPHENOL CORPORATION. NO RIGHTS OF REPRODUCTION ARE IMPLIED. ALL DIMENSIONS ARE SUBJECT TO NORMAL MANUFACTURING VARIATIONS.

Amphenol

Sine Systems - www.amphenol-sine.com
44724 Morley Drive
Clinton Township, MI 48036

C091 (M16) POS FEMALE RECEPTACLE 22AWG, 8C LEADS, UL1569 300V

SIZE	TYPE	DWG NO:	REVISION
	C-	CA0911F1180XX	A1

SCALE: HALF | CA0911F1180XX | SHEET 1 OF 1