REVISIONS					
REV	ECO	DESCRIPTION	DATE	BY	APPR
A1	-	TECHNICAL DATA SHEET RELEASE	12-MAY-14	KMM	RFC

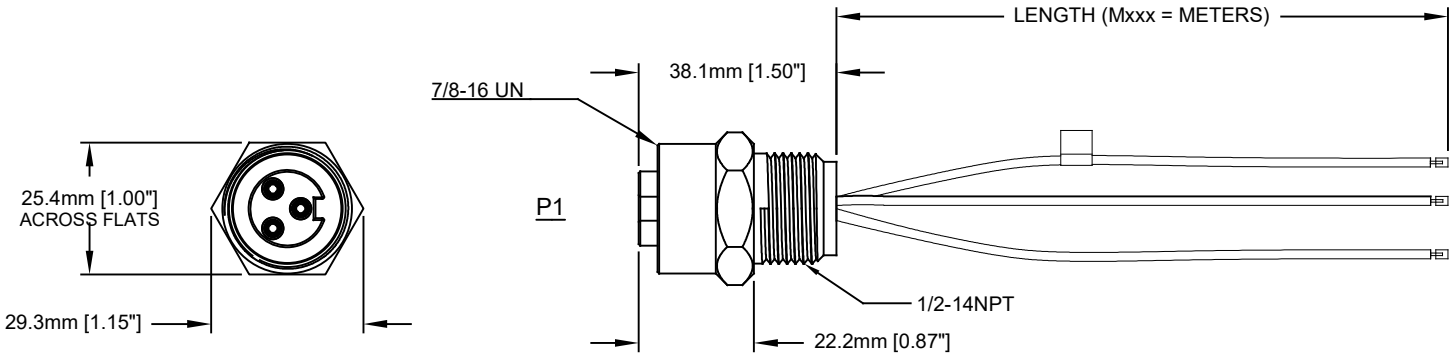

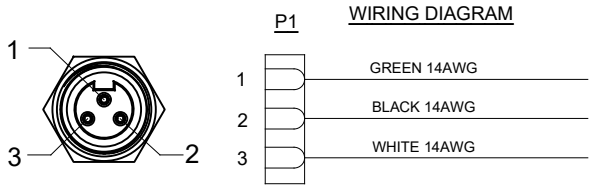

TECHNICAL DATA:

1) MATERIALS:
HOUSING: MACHINED ALUMINUM, ANODIZED
INSULATION INSERT: THERMOPLASTIC, UL 94/V-0
CONTACT: GOLD FLASH PLATING OVER COPPER ALLOY
CONDUCTOR INSULATION: PVC
NUMBER OF CONDUCTORS: (3) 14AWG

2) ELECTRICAL DATA:
CURRENT (MAX): 15A
VOLTAGE (MAX): 600V AC/DC
INSULATION RESISTANCE (MIN): 5000M OHMS
DIELECTRIC TEST VOLTAGE: 2200V

3) MECHANICAL DATA:
KNOCKOUT HOLE SIZE FOR PANEL MOUNT: 22.2mm [.88"]
TEMPERATURE RANGE: -40°C TO 90°C
PROTECTION: IP67 (MATED CONDITION)
MATING CYCLES: >500
VIBRATION RESISTANCE PER MIL-STD-202 METHOD 204
THERMAL SHOCK PER MIL-STD-202 METHOD 207
48 HOUR SALT SPRAY PER MIL-STD-202 METHOD 101

4) RoHS COMPLIANT

5) UL 2237 LISTED ASSEMBLY
UL FILE NUMBERS: E339703

Amphenol P/N	MOLEX	TURCK
P29039-M*	1R3000A28A*	RKF34-*M/NPT
P29039-M.5	1R3000A28A005G	RKF34-.5M/NPT
P29039-M1	1R3000A28A010G	RKF34-1M/NPT
P29039-M2	1R3000A28A020G	RKF34-2M/NPT
P29039-M3	1R3000A28A030G	RKF34-3M/NPT

TOLERANCE	
0-2.99 M = +100.0/-25.0mm	0-9.99 FT = +4" / -1"
3-8.99 M = +150.0/-25.0mm	10.00-29.99 FT = +6" / -1"
9-14.99 M = +300.0/-25.0mm	30.00-49.99 FT = +12" / -1"
15-OVER M = +450.0/-25.0mm	50 FT-OVER = +18" / -1"

PART NUMBER	DESCRIPTION	ITEM
QUANTITY	MATERIALS LIST	

UNLESS OTHERWISE SPECIFIED
1) All dimensions are in metric(mm).
2) Tolerances are as follows:
1 PL DEC ±0.30 | Fractions ±1/64
2 PL DEC ±0.15 | Angles ±1°
3 PL DEC ±0.08
3) Note reference = X

MATERIAL SPECIFICATIONS:
PROCESS SPECIFICATIONS:
NEXT ASS'Y:

SIGNATURES		DATE
DRAWN:	KMM	12-MAY-14
CHECKED:	MRF	12-MAY-14
ENGINEER:	KMM	
APPROVAL:	RFC	12-MAY-14

CUSTOMER:

THIS DRAWING IS SUPPLIED FOR INFORMATION ONLY. DESIGN FEATURES, SPECIFICATIONS AND PERFORMANCE DATA SHOWN HEREON ARE THE PROPERTY OF THE AMPHENOL CORPORATION. NO RIGHTS OF REPRODUCTION ARE IMPLIED. ALL DIMENSIONS ARE SUBJECT TO NORMAL MANUFACTURING VARIATIONS.

Amphenol

Sine Systems - www.amphenol-sine.com
44724 Morley Drive
Clinton Township, MI 48036

M22 PB LITE, 3 PIN, FEMALE RECEPTACLE
DROP, 14 AWG, 1/2 - 14NPT

SIZE	TYPE	DWG NO:	REVISION
	C-	P29039-Mxxx	A1

SCALE: FULL | C-P29039 | SHEET 1 OF 1

TITLE: M22 PB LITE, 3 PIN, FEMALE REC., 14AWG, 1/2-14NPT
DWG NO: C-P29039-Mxxx
REV: A1
SH: 1
OF: 1